IWAKI PUMPS

T. 123E-4

Iwaki

Chemical Gear Pump

G Series INSTRUCTION MANUAL

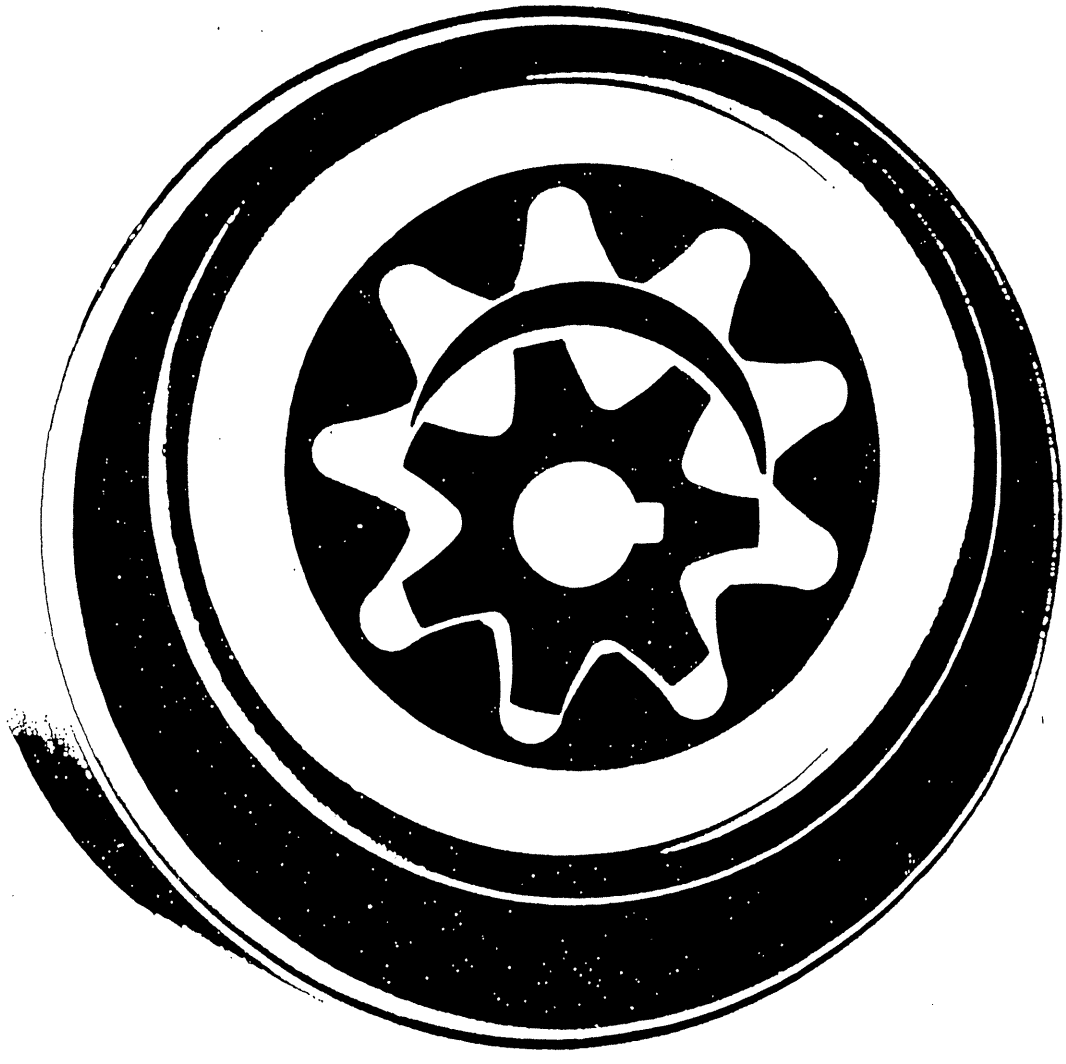

Contents

INTRODUCTION

The G series pumps are of the internal gear type, with gears made of ceramic. They are subjected to less abrasion from running and have a long life. They have a wide range of uses, as they can handle liquids with a low viscosity as well as those with a viscosity as high as 10,000cP, and lubricative liquids as well as unlubricative ones. Prior to using your pump, please read this instruction manual carefully to ensure safe and efficient use through appropriate handling and maintenance.

INSPECTION AFTER UNPACKING

Upon receiving the pump, immediately check the following:

① That the type, discharge, discharge pressure, materials, rpm and other items indicated on the nameplate correspond to your order.

② That all the attachments are provided.

③ Whether the pump has been damaged in transit or bolts or nuts have been loosened.

Note

If you find any damage, or something is not in order, please contact the agent, supplier or business office from whom you purchased the product.

PUMP IDENTIFICATION CODES

GX – 15 S K K G – 04 M C – J

① ② ③ ④ ⑤ ⑥ ⑦ ⑧ ⑨ ⑩

①Type X: Gland packing, mechanical sealing

M: Magnet drive

②Size (Discharge per revolution)

Size	12	15	25	32
Discharge per Revolution (mℓ / rev)	1.0	3.3	12.8	25.0

③Material of body

S : Stainless steel

④Material of gears

K: SiC / SiC

N: Si_3N_4/SiC

⑤Material of bearings

C : Carbon

K : SiC

⑥Sealing material of shaft

G : Gland packing seal

W: Gland packing seal (Injection type)

M: Mechanical seal (Sliding parts - Carbon/Al_2O_3)

C : Mechanical seal (Sliding parts - SiC/SiC)

O : Magnet drive

⑦Motor output

02:	0.2kW	15:	1.5kW
04:	0.4kW	22:	2.2kW
07:	0.75kW	37:	3.7kW

⑧Type of motor

M : 4Pmotor

S : 6Pmotor

N : Variable speed drive

F : Inverter motor

X : Other

G3 : Geared motor (Reduction gear rate 1/3)

G5 : Geared motor (Reduction gear rate 1/5)

H3 : Inverter geared motor (Reduction gear rate 1/3)

H5 : Inverter geared motor (Reduction gear rate 1/5)

⑨Motor specific

A : Increased safety, outdoor type

B : Explosion proof, outdoor type

C : Totally enclosed fan cooled, outdoor type

Without code : Indoor type

⑩Special specifications

J : Equipped with a thermal insulation jacket

T : Equipped with a torque limiter

S : Specified specifications

Without code : Standard

THEORY OF FUNCTIONING

① Pumping is carried out by a change in the capacity of the meshed part between the pinion (drive-side gear) supported by two bearings and the internal gear (driven-side gear) whose periphery is supported by a bearing (A).

② In the suction process, they are out of mesh and the space defined by the two gears and the casing expands. The negative pressure caused by this process works to suck liquid into this space.

③ In the discharge process, the teeth of the gears begin to mesh and the space defined by the two gears and the casing shrinks to force out the liquid.

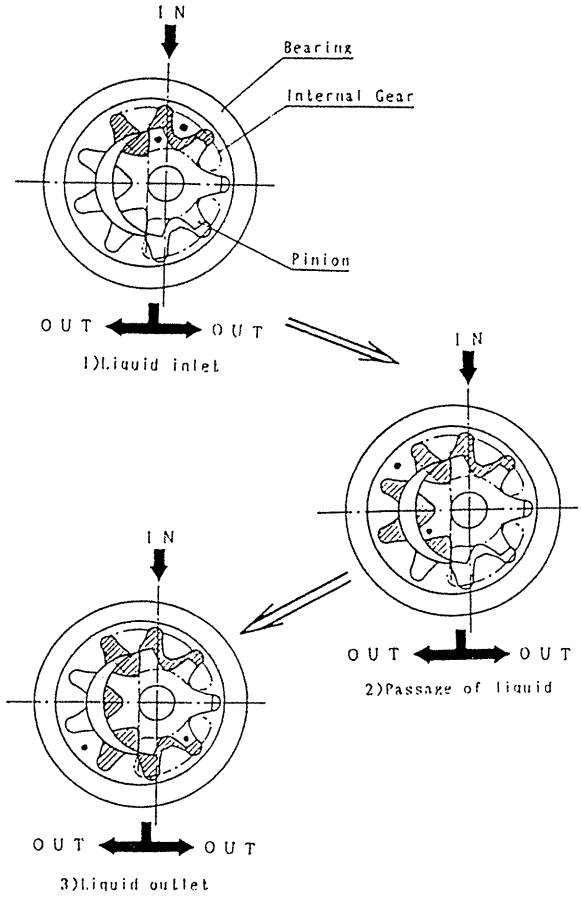

SPECIFICATIONS

■ SPECIFICATIONS

Model	Discharge per Revolution	Maximum (rpm)	Maximum Discharge Pressure *1	Temperature Range	Viscosity Range*2	Reachable Degree of Vacuum *3	Connection	
							IN	OUT
	(cc / rev)		kgf / cm²	°C	(cp)	(torr)	PT1/2	PT3/8
GX-12	1.0						PT1/2	PT3/8
GX-15	3.3		10	0~150	0.5~ 10,000		PT1	PT3/4
GX-25	12.8						PT 1 1/4	PT1
GX-32	25.0	1800				40		
GM-12	1.0						PT1/2	PT3/8
GM-15	3.3						PT1/2	PT3/8
GM-25	12.8		7	0~80	0.5~100		PT1	PT3/4
GM-32	25.0						PT 1 1/4	PT1

*1 The values listed in the table are maximum values.
It depends on the motor rpm and viscosity. For further details, please contact us.
*2 Suitable motor rpm and motor output should be selected for the viscosity of liquid to be handled. For further details, please contact us.
*3 The value is for 25°C clear water.

External Dimensions

Model GX

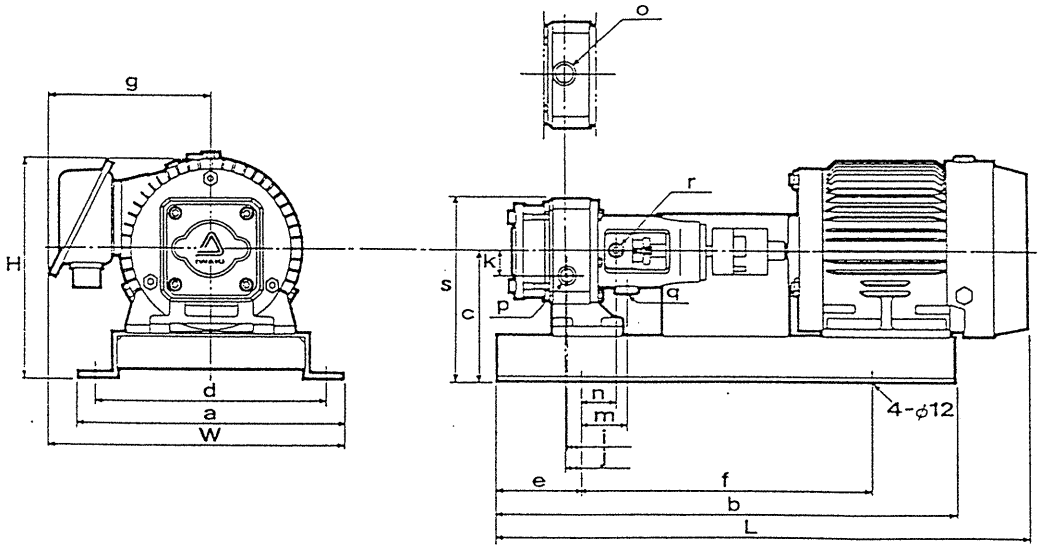

GM type

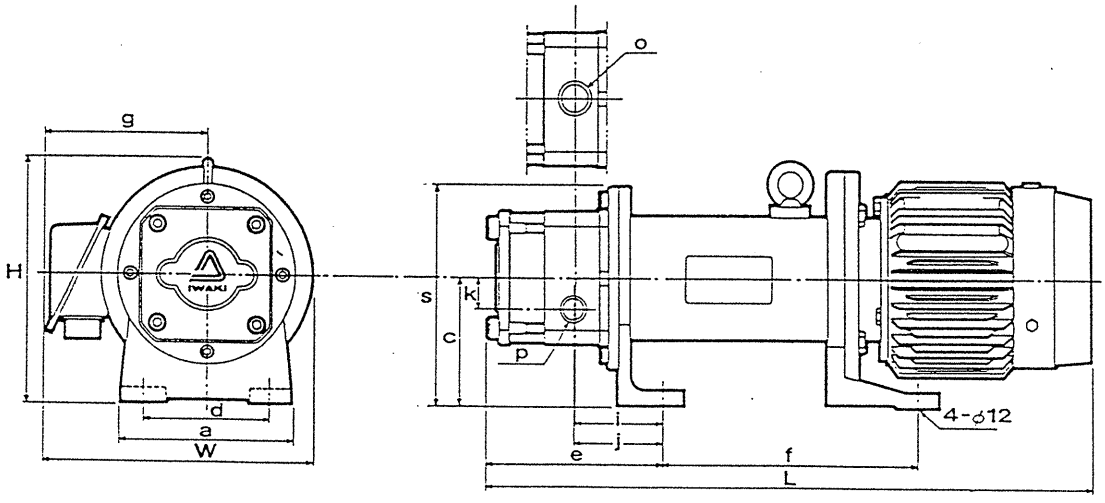

Mode	Motor	a	b	c	d	e	f	g	h	i	j	k	l	m	n	W	O	p	q	r	s	Weight (kgf)
GX-12S/15S	02MC	252	440	111.5	222	80	280	142	182.5	13	14	24	442	41	29.5	268	PT 1/2	PT 3/8	PT 1/8	PT 1/8	160.5	17
	04MC	252	440	111.5	222	80	280	151	186.5	13	14	24	469	41	29.5	277					160.5	19
	02SC	252	440	111.5	222	80	280	151	186.5	13	14	24	469	41	29.5	277					160.5	19
	04SC	252	440	120	222	80	280	152	205	13	14	24	501	41	29.5	278					169	26
	04G □	252	440	111.5	222	80	280	160	219.5	13	14	24	528	41	29.5	286					160.5	24
GM-12S/15S	02MC	128	-	95	98	121	141	142	189.5	65	66	24	423	-	-	222			-	-	144	21
	04MC	128	-	95	98	121	141	151	189.5	65	66	24	445	-	-	231			-	-	144	24
GX-25S	07MC	266	560	140.5	236	100	360	152	225.5	8	9.5	30	553	49.5	38	285	PT1	PT 3/4	PT 1/4	PT 1/4	202.5	34
	15MC	266	560	140.5	236	100	360	166	241	8	9.5	30	607	49.5	38	299.					202.5	42
	15SC	266	560	150	236	100	360	172	289	8	9.5	30	648	49.5	38	305					212	49
	07G □	266	560	140.5	236	100	360	165	265.5	8	9.5	30	606	49.5	38	298					202.5	35
GM-25S	07MC	160	-	120	120	165	245	152	229.5	83.5	85	30	573	-	-	252			-	-	182	43
GX-32S	22MC	340	740	170	300	115	510	161	309	0	0	37	707	80	60	331	PT 1 1/4	PT1	PT 3/8	PT 1/4	244.5	69
	37MC	340	740	170	300	115	510	177	332	0	0	37	724	80	60	347					244.5	79
	22SC	340	740	170	300	115	510	177	332	0	0	37	724	80	60	347					244.5	79
	15G □	340	740	170	300	115	510	157	337	0	0	37	725	80	60	327					244.5	74
GM-32S	22MC	204	-	146	160	195	224	161	285	91	91	37	665	-	-	263			-	-	220.5	80

STRUCTURE AND MATERIALS

GX type

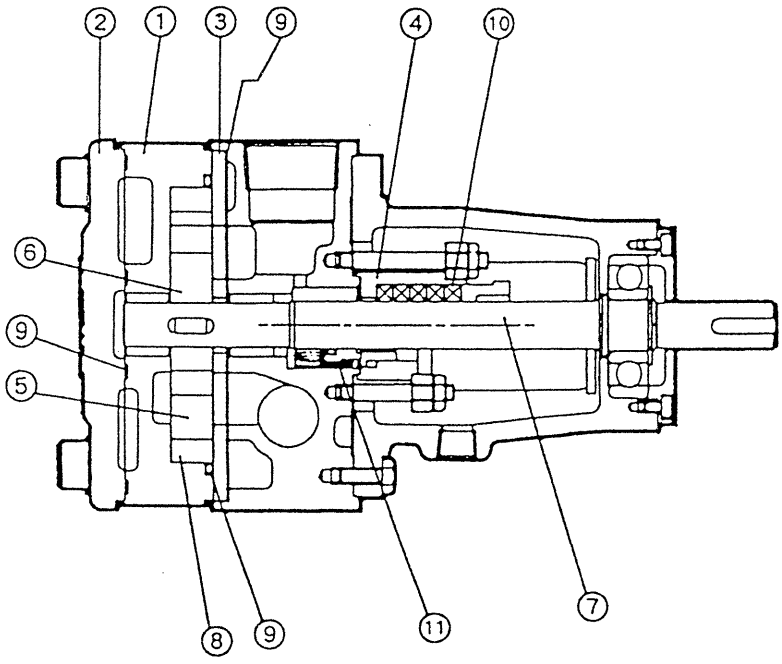

Parts	Main Material of Wet end part:
①Housing	SUS316
②Cover	SCS14
③Side plate	SCS316
④Seal case	SCS14 or SCS316
⑤Internal gear	SiC
⑥Pinion	SiC or Si_3N_4
⑦Shaft	*PSL® or SUS316/Cr_2O_3
⑧Bearing	Carbon or SiC
⑨Gasket, O ring	PTFE
⑩Gland packing	PTFE fiber
⑪Mechanical seal	SUS316 / Al_2O_3 / Carbon / PTFE
	SUS316 / SiC / SiC/PTFE

* PSL®: Deposition curing type corrosion resisting stainless steel.

GM type

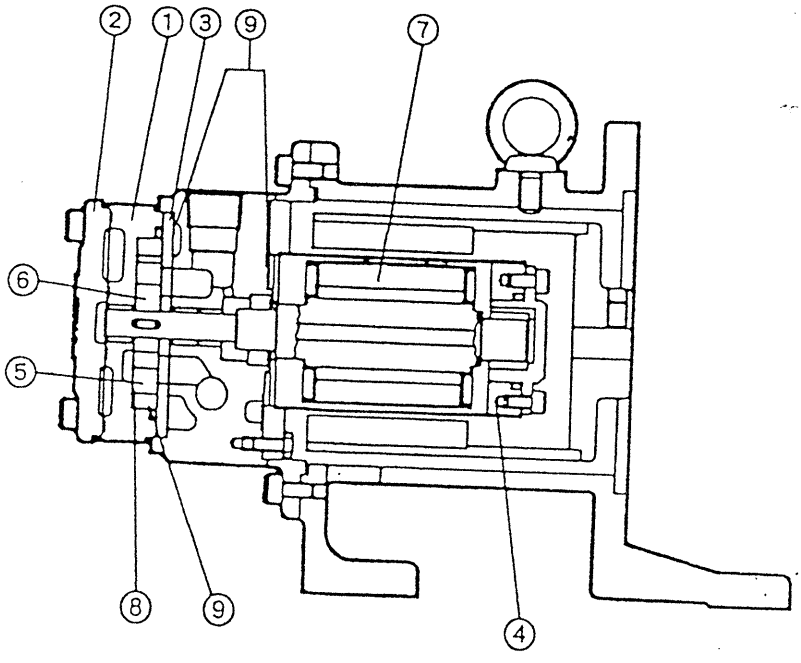

Parts	Main Material of Wet end part:
①Housing	SUS316
②Cover	SCS14
③Side plate	SCS316
④Seal case	SCS316 or SCS304
⑤Internal gear	SiC
⑥Pinion	SiC
⑦Magnet capsule	SUS329j1 / SUS316
⑧Bearing	Carbon
⑨Gasket, O ring	PTFE

NOTES ON OPERATION

① Do not operate the pump empty.

The pump should never be operated empty, as this may damage the internal parts. When the pump is operated for the first time after installation or completion of repair work, prime it or confirm that there is liquid in the pump body before starting.

② Confirm the directions of revolution and flow.

The pump should revolve to the right (clockwise) when viewed from the driving side. The liquid should be sucked from the port above the port housing and discharged from either the right or left port below, as selected.

③ Prevent air from entering the pump.

Confirm that air does not enter through the suction piping and the seal portion of the pump shaft. The introduction of air is detrimental to pump performance and may cause abnormal noise.

④ Do not close the valve on the outlet side.

The discharge side should never be closed when the pump is operated. If it is, the pressure inside the pump rises at an unusually high speed, which may cause a problem.

⑤ Abnormal noise or vibration

When there is abnormally loud or violent noise or vibration, stop the pump immediately and examine it. Check that the piping is properly fixed and the set bolts or installation bolts of the pump and the motor are not loose.

⑥ Thermal effect

The liquid to be handled changes in viscosity, vapor pressure and corrosion resistance as the temperature varies. Therefore, close attention is required to a change in liquid characteristics.

Temperature range of liquid to be handled:	GX type	0 ~ 150°C
	GM type	0 ~ 80°C

* For the recommended temperature ranges of various chemical liquids, see the table of corrosion resistance. If any further information is needed, please contact the office you placed your order with.

Ambient temperature in which pump is used:

0 ~ 40°C

⑦ Handling of slurry liquid

Only the GX type pumps with SiC bearings can handle a liquid containing fine slurry, of which the grain size should be less than 10μm in diameter. As each slurry liquid has its own characteristics, the suitable pump specifications should be determined for the intended slurry liquid. Please contact us when you look for a pump to transfer a slurry liquid.

⑧ Pump with torque limiter

When the torque limiter has functioned, cut power supply immediately to stop the pump. If the torque limiter is left to function, the heat generated by it may raise the pump temperature to ignition point or decrease torque precision.

INSTALLATION, PIPING AND WIRING

■ Installation

① Install the pump as close to the inlet-side tank as possible, and in a place where it can be pressed in. Choose a place which can minimize the length of the discharge pipe. Leave enough space round the pump for its inspection and maintenance after installation.

② Confirm that the pump is horizontal, by making use of the base surface or the top surface of the port housing and by means of a level.

■ Piping

① Choose pipes with diameters which fully meet the suction and discharge conditions. Particularly when a liquid containing sedimentary slurry is handled, the piping should be planned very carefully (see the "Reference Material for Piping" on page 40).

② In case a sedimentary slurry liquid is transferred, do not have a U-shaped section in the piping. The lowest part of the piping should be fitted with a drain plug.

③ Select the material of the piping after evaluating its corrosion resistance, pressure resistance, etc., against the liquid to be handled.

④ Before connecting pipes, do not forget to blow air into them or flush them so as not to leave burr, dirt and refuse weld in the piping.

⑤ Provide supports to the piping to prevent piping load from exerting on the pump.

⑥ In case a high or low temperature liquid is to be transferred, do not allow the pump to be affected by thermal expansion or contraction of the piping.

⑦ Make the piping as short as possible, with low bends, to prevent air from remaining in it.

⑧ It is recommended that a piping for cleaning be provided in case a highly viscous liquid, toxic liquid, liquid to hinder maintenance and inspection activities or liquid feared to stick is to be transferred.

⑨ Attach pressure gauges to positions near the pump both on the suction and discharge sides.

⑩ In a pump with the injection type seal (gland packing seal), the seal case is provided with a port connecting to the piping. Attach an injection liquid pipe to this portion.

⑪ If the liquid is likely to freeze in the discharge piping, provide a drain vent so that the liquid in the discharge and suction pipes can be drained.

⑫ Take particular care that air does not remain in the suction pipe, and test it for leakage upon completion of piping.

■ Wiring

Use good wiring apparatus, follow the electric installation standard and internal wiring regulations, and strictly observe the following points.

① Use a suitable electromagnetic switch for the specifications of the motor (voltage, capacity, etc.).

② In case the pump is used outdoors, wiring should be made so as not to allow rainwater, etc., to get into the switch section.

③ Do not mount an electromagnetic switch or press button switches on the pump or the base.

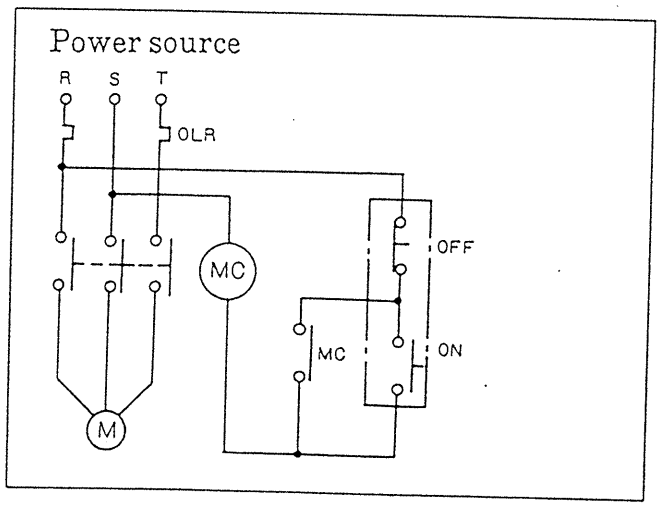

M ..... Motor
MC ..... Electromagnetic switch
ON / OFF ..... Push button switches
OLR ..... Overload relay

OPERATION

■ Preparation for Operation

① Clean the insides of the piping and the pump thoroughly, and fill with liquid.

② If the flange connection bolts, base-fixing bolts, etc., are loosened, clamp them tightly.

③ In the case of a GX type pump, remove the coupling cover and turn the coupling manually to confirm that it can be turned smoothly without scratching. In the case of a GM type pump, turn the motor fan by means of a screwdriver or similar tool to see if it can be turned lightly.

④ Open the suction and discharge valves fully.

The pump should never be operated empty or while the valve on the outlet side is closed. This may damage the inside of the pump.

⑤ Prime the pump. Do not fail to prime it when the pump is run for the first time after its installation or after it is repaired.

⑥ Since the pump has been tested by means of clear water prior to shipment, there may be some water remaining in it. Should it have an adverse effect on the functioning of the pump, flush the pump with the liquid to be handled.

⑦ The pump should rotate clockwise when viewed from the driving side. See the motor fan to confirm that it is rotating in the proper direction. In case it should be rotated inversely, change the connection of two phases of a 3-phase power source.

When the pump is equipped with a reduction gear or a speed change gear, also refer to the instruction manual of the motor.

■ Operation

① Open all the valves and put the pump into action. When the pump begins to work, liquid transfer should start. If liquid is not transferred after a while (5 or 6 minutes), prime the pump two or three times. In the event the pump still does not suck in the liquid, check whether there is any problem, such as a leak, on the suction side. If the pump does not run after applying power, something may be wrong with the wiring. Therefore, examine the wiring.

Note:

Prior to starting up, adjust the gland packing. Because the gland packing is clamped temporarily when the pump is shipped from the factory, air suction may not start by itself in the case of a sucking-up system. Further, liquid leaks from gland packing rather frequently, (in a GX model of the gland packing type).

② Measure the discharge pressure of the pump by the pressure gauge and confirm that it is below the maximum pressure shown on the nameplate.

③ Try to avoid an abrupt change in pressure while the pump is in motion. This may cause the magnet coupling to disengage, in the GM type pump.

④ If the magnet coupling of a GM type pump is disconnected during operation, stop the pump temporarily, eliminate the cause, and turn the switch on again. Do not leave the motor revolving while the magnet coupling is off. This has an adverse effect on the magnets.

■ Stopping Operation

① In case a very sticky liquid is handed, stop the pump only after fully cleaning the insides and piping with a solvent, for example.

② To stop the pump, first cut the power supply to the pump and then close both the suction and discharge valves. If a valve is closed while the pump is in motion, the pressure inside the pump rises quickly and causes a problem.

③ In cold weather, liquid may freeze even in a brief out-of-operation period, and break the pump. Make sure to drain the piping and the pump. If it is impossible to drain them, for example, in a brief interruption of operation, keep the pump warm by means of a band heater or something similar to prevent the liquid within from freezing. Both the suction and discharge valves must be kept open.

④ In case of a power failure, turn the switch off.

■ Transfer of Highly Viscous Liquid

(Applicable to GX-□ N and F pumps of variable speed type)

If the pump is to be used to transfer a highly viscous liquid, change the rpm by following the procedure described below. The discharge varies in proportion to rpm but the rpm has to be decreased as the viscosity rises. From the required discharge and the viscosity of the liquid handled, a suitable pump and its rpm can be determined as follows, by using the performance chart below.

① Mark the required discharge on the scale on the left, and draw a horizontal line to the right.

② Mark the viscosity on the scale on the top and draw a line downward along the viscosity line. If the viscosity falls in the middle of two viscosity lines, use the line on the left (a higher value).

③ Extend the point of intersection A' horizontally to the left to obtain the point of intersection A between it and the first pump line it meets.

④ Drop a perpendicular from the point of intersection A. The point it reaches is the rpm suitable for the required discharge. If the liquid contains soft slurry, however, the rpm has to be 75% of it, and if it contains hard slurry, 50%. In any case, slurry whose grain size is larger than 10μm in diameter cannot be handled. The GM type pumps are incapable of handling slurry.

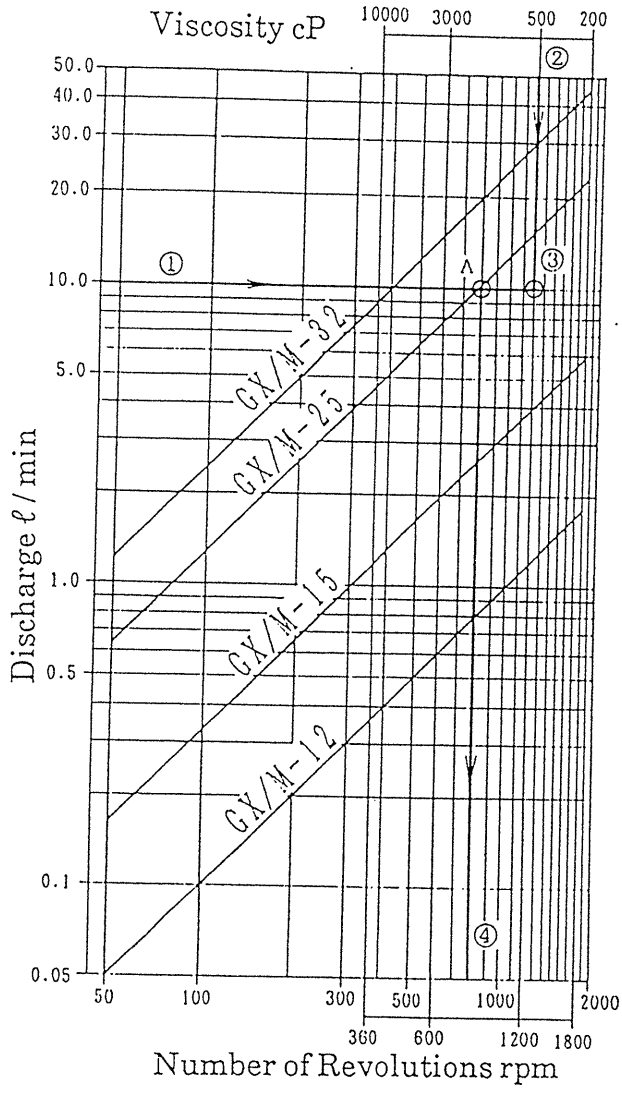

The performance chart shows discharges when the discharge pressure is 0kgf / cm^2.

MAINTENANCE AND INSPECTION

■ Routine Check

① Confirm that the pump operates smoothly, without vibration or abnormal noise.

② Check that the Fluid level in the feed tank and the suction pressure are in order.

③ Confirm that the discharge pressure and the electric current while the pump is in motion are below the values indicated in the nameplates of the pump and the motor.

④ The following points should be paid attention to in the shaft seal portion:

ⓐ Gland packing type

Structurally, gland packing is one of the expendable parts. Its life depends largely on the liquid handled, service pressure, and other conditions. Accordingly, it should be replaced based on proper judgment. The life also changes depending on the condition in which it is mounted. When clamping needs to be tightened, adjustment should generally be made in a range of 1 / 6 to 1 / 2 rotation. A full rotation is the maximum. Forcible clamping at once will burn the gland packing, make it stick to the shaft, and damage both. When tightened clamping fails to stop a leak which is far above the standard range, replace the gland packing with a new one.

Standard leakage: 0.1mℓ / min ~ 30mℓ / min

ⓑ Mechanical seal type

Like gland packing, the mechanical seal is also an expendable part. Under normal conditions, liquid does not visibly leak. If it begins to drip or to leak in a stream, the seal has reached the end of its life. Replace it immediately with a new one. Generally, the following is the standard of leakage from a mechanical seal:

Standard leakage: Less than 3mℓ / hr

■ Periodical Inspection

In order to ensure smooth functioning of your pump, the following items have to be inspected periodically. In overhauling it , handle the sliding and sealing parts with special care. The drive magnet and the magnet can have powerful magnetism. Do not bring them near electronic appliances, etc., which are aversive to a strong magnetic field, so as to avoid causing trouble to the latter.

Name of Part	Check point	Measure
Pinion / Internal gear	○ Whether there is any break or crack	● If there is any, replace it with new one.
Bearings	○ Whether there is any break from abrasion, crack, or traces of sliding	● If there is any, replace it with new one. ● Abrasion limit (Inside diameter of bearing and outside diameter of spindle 150μm)
Shaft (GX type)	○ Whether there are unusual traces of sliding, abrasion or bending	● If there are, replace it with new one.
Gear housing / Port housing assy	○ Whether there are unusual traces of sliding or abrasion ○ Unleanliness and loadings	● Clean it. ● If there are, replace it with new one.
O rings / Gaskets	○ Whether there is any swelling, crack or flaw	● If there is any, replace it with new one.
Drive magnet assy (GM type)	○ Whether there are traces of sliding ○ Whether housing is fixed to correct position, and setscrew is tight enough ○ Eccentricity between inside circumference of magnet and motor shaft (maximum 5 / 100mm)	● If there are, contact office you placed your order with. ● Fix it to motor shaft correctly and reclamp setscrew. ● Reattach it to motor shaft.
Seal case (GM type)	○ Whether there are traces of sliding on inside surface ○ Extent of abrasion of bearing ○ Uncleanliness and loadings inside	● If there are, replace it with new one. ● Replace it with new one, if abrasion limit is passed. ● Clean them.
Magnet capsule (GM type)	○ Whether there are traces of sliding on both ends and curved sides, and extent of abrasion of bearing ○ Extent of abrasion of spindle and whether there is crack	● Replace it with new one if traces are found or abrasion limit is passed. ● If anything is wrong, replace it with new one.

CAUSES OF TROUBLE AND TROUBLESHOOTING

Problem	Symptom	Cause	Remedy
Liquid is not discharged.	Motor does not revolve	○ Defective wiring ○ Fuse on power source has gone. ○ Motor coil has broken. ○ Adhesion of shaft seal portion ○ Pinion and internal gear have adhered to gear housing or broken. ○ Liquid has frozen. ○ Overload ○ Foreign matter is bitten in.	● Rewire. ● Put in new fuse. ● Replace it with new motor. ● Disassemble and wash. ● Disassemble and wash or replace. ● Melt it. ● Check wiring (Please call us). ● Clean it.
	Both motor and pump revolve.	○ Valve in piping is closed. ○ Piping is blocked by foreign matter. ○ Pump has revolved inversely. ○ Viscosity is too high for liquid to get into pump. ○ Air is sucked through gland packing. ○ Air gets in through suction pipe, or air cannot be let out. ○ Liquid does not get into pump (in case of suction system) ○ Gear or key is damaged.	● Open valve. ● Clean it. ● Rewire. ● Increase height of space which pump is pressed in or increase diameter of piping. ● Clamp gland packing more firmly. ● Redo piping. ● Prime pump. ● Replace it.
	Motor revolves but pump does not (GM type, or any other pump equipped with torque limiteras option).	○ Adhesion of shaft seal (pump with torque limiter) ○ Magnet coupling is disconnected (GM type). ○ Overload	● Disassemble and wash. ● Eliminate cause (foreign matter or overload). ● Check piping (Please call us).
Decrease in discharge.		○ Gear housing or side plate is worn out. ○ Air leaks from feed pipe. ○ Solid substance stuck in suction pipe or discharge pipe to reduce piping diameter. ○ rpm lowered by voltage drop.	● Replace it. ● Redo piping. ● Clean it. ● Check voltage and take necessary measure.
Liquid leaks.		○ Shaft seal is worn out or damaged. ○ Defective O ring or gasket ○ Pump shaft is worn out or damaged.	● Replace it. ● Replace it. ● Replace it.
Motor overheats.		○ Overload applied to motor. ○ Voltage drops. ○ Overload ○ Ambient temperature is high.	● Check piping (Please call us). ● Check voltage and take necessary measure. ● Check whether voltage or frequency is suitable. ● Check whether specific gravity and / or viscosity is suitable. ● Check whether gears are locked or motor fan is rotated easily by screwdriver. ● Improve ventilation.
Abnormal sound or vibration		○ Defective installation / deviation of centering ○ Bearing is worn out. ○ Suction pipe is blocked / cavitation is caused. ○ Magnet can or shaft is damaged. ○ Drive magnet is out of balance. ○ Magnet coupling is disengaged. ○ Motor has gone out of order. ○ Shaft seal is burnt and adhered. ○ Foreign matter is lodged in or gear is damaged.	● Check and adjust. ● Repair or replace. ● Clean. Eliminate cause of cavitation. ● Replace it. ● Replace it. ● Stop operation. (See "pump does not revolve" column above.) ● Replace it. ● Check and adjust. ● Check and replace.
Oil leak (Speed change gear)		○ Oil seal is defective.	● Replace it.

DISASSEMBLY AND REASSEMBLY OF PARS

Refer to the "Structure and Names of Parts" section when you disassemble, reassemble or adjust any of the pump parts.

[Disassembly and Reassembly of Pump Unit]

The liquid handled remains in the pumping unit. In case noxious liquids such as a toxic liquid and highly adhesive liquid are handled, clean the inside of the pump thoroughly. Keep the disassembled parts aside carefully so as not to damage them.

■ Disassembly of Pump Unit

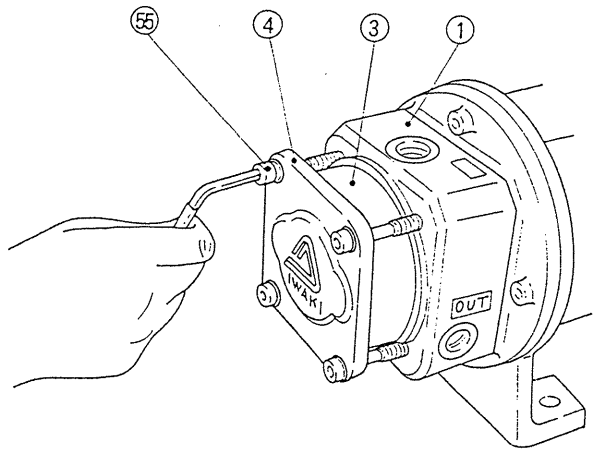

① Remove four hex socket head bolts [55] and detach cover [4].

② Pull out gear housing assy (gear housing [3], internal gear [13], bearings [16] and [17], and O rings [68] and [37]) slowly and straight so that the bearings are not scratched. When this is done, pinion [14] will probably be detached together with the unit. Take care not to drop and break it.

③ Pull dowel pin for positioning [53] out of side plate [2].
(Models GX / GM-2 have two dowel pins [53].)

④ Pull pinion [14] to detach it from shaft [15].

⑤ Detach key 1 [21] from shaft [15]. Take care that the key and key groove are not scratched when the key is detached.

⑥ Remove side plate [2] and gasket 1 [35].

⑦ Detach internal gear [13] and bearing [16] from gear housing [3]. They can be detached easily by pulling them out while turning them.

- Pinion [14] and internal gear [13] are made of ceramic and are broken easily. Handle them with care.

⑧ Bearing 2 [17] can be detached from gear housing [3] and port housing [1] as follows.

ⓐ Carbon bearing (Models GX / GM- □S □C)

The bearing has been bonded. Heat it by meams of a dryer, to remove the adhesive and pull it out.

ⓑ SiC bearing (Models GX / GM- □S □K □)

As the bearing is shrink-fitted, the gear housing and port housing should be heated in a constant-temperature bath (150°C) for 2 ~ 3 hours before the bearing is pulled out of them.

Pull out the bearing carefully so as not to scratch the bearing-insertion hole.

■ Mounting of Bearing 2

① Carefully wipe the inside of the bearing insertion hole of gear housing [3] or port housing [1] with a solvent, to remove the adhesive.

② If it is a carbon bearing (Models GX/GM-S□ C □), apply adhesive (Locktite #648) to its periphery.

③ Insert the bearing about 0.5mm. Wipe off the adhesive forced out onto the housing side and the inside of the bearing when the bearing is inserted.

④ If it is a SiC bearing (Models GX/GM-□ S □ C), the gear housing or port housing should be heated in a constant-temperature bath (150°C) for 2 ~ 3 hours. Then apply adhesive (Locktite #648) to the periphery of the bearing and insert it into the housing taken out of the constant-temperature bath. Insert an end of the bearing about 0.5mm and wipe off the adhesive forced out.

⑤ Leave the housing as it is until the adhesive has set completely.

■ Reassembly of Pump Unit

① Dip bearing 1 [16] into water and insert it into gear housing [3]. The bearing should be inserted perpendicularly while being rotated. Do not force it in.

② Position bearing [16] and housing [3] so that their holes for parallel pin meet each other. (Use parallel pin [53] in positioning.) The SiC bearing should be inserted in proper orientation, i.e., its notch should face upward. Next, insert O ring [68] into the gear housing.

③ Insert internal gear [13] into bearing 1 [16].

(Reassembly of gear housing assy completed)

④ After insertion of dowel pin [53] into port housing [1], attach gasket [35] and side plate [2] to it. In this step, confirm that the sizes and positions of the holes in the side plate and port housing are in accord.

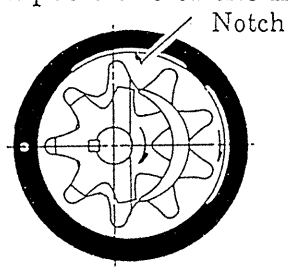

⑤ Attach key [21] to shaft [15] and assemble it and pinion [14] together.

⑥ Hold gear housing assy (gear housing [3], internal gear [13], bearing 1 [16] and O ring [68]) to fit to dowel pin [53] and pinion [14], and press it onto shaft [15] gradually until the end of the shaft reaches the deep end of the gear housing. After insertion, shake the gear housing assy lightly from side to side, and confirm that the gear does not rotate.

⑦ Insert O ring [37] into gear housing [3] and clamp cover [4] onto port housing [1] uniformly by means of four sets of hex socket head bolts [55] and spring washers [65].

(Clamping torque: 12 and 15 type . . 75 kg-cm,
25 type . . 150 kg-cm, 32 type . . 300 kg-cm)

- After clamping, rotate the coupling or motor fan cover manually to confirm that the shaft revolves smoothly.

[Disassembly and Mounting of Gland Packing]

■ Disassembly of Gland Packing (Gland type GX Models)

① Remove coupling cover [76]. Remove four bolts [81] of sub-base [73] and detach the pump unit from the base.

② Disassemble the pumping unit by following steps①~⑥ of "Disassembly of Pumping Unit".

③ Loosen two bolts [61] of packing retainer [12].

④ Remove five bolts [60] from bearing housing [5]. Hold the bearing housing by hand and pull it together with shaft [15] toward the motor. The gland seal portion is exposed. Draw out bearing 2 mounted on the port housing [1] horizontally, while rotating it slowly so that the bearing is not scratched by the end of the shaft.

⑤ Remove bolts [61] which were loosened in ③ above. Remove nut [64] from seal case retainer [11] and detach seal case retainer [11].

⑥ Remove seal case [7] and remove the old gland packing within. Do this carefully so as not to damage the inside of the seal case.

Note: Make sure not to misplace gasket 4 [38].

■ Mounting of Gland Packing

① Get new packing [109] ready for mounting.

② Press five sheets of packing [109], sheet by sheet, into seal case [7]. In this insertion, stagger the slits of adjoining packing sheets by 90°.

Note: Packing should not be forced in, for example with the tip of a screwdriver. When lantern ring [50] is used, insert it between the second and third sheets. Take care not to block the injection port.

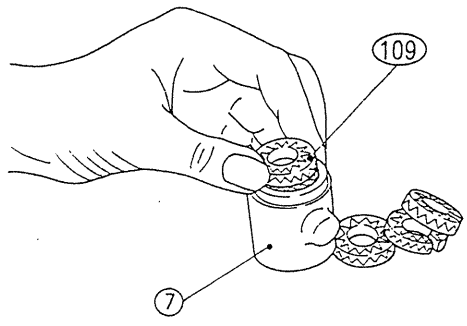

③ Attach gasket [38] to seal case [7] in which gland packing [109] has been loaded. Mount it on port housing [1] by using stud bolt [34] and seal case retainer [11] whose hole is positioned to the stud bolt and by loosening nuts [64].

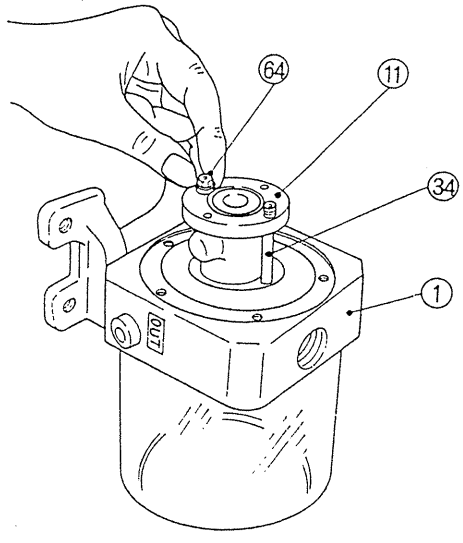

④ Attach stud bolt [61] to seal case retainer [11] and clamp packing retainer [12] lightly by hand by means of two nuts [64].

⑤ Insert the shaft which has been integrated with bearing housing [5] carefully into the hole of packing retainer [12]. Press the shaft in while rotating it slowly so as not to damage gland packing [109] and seal case [7].

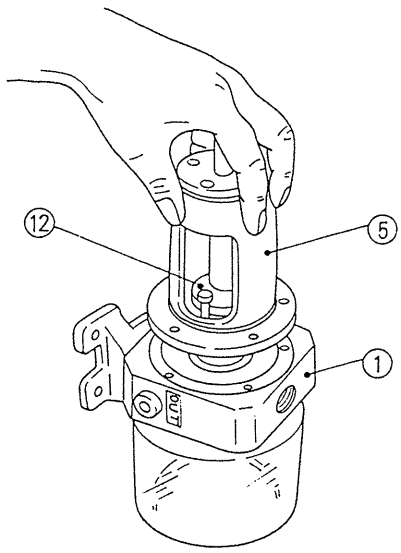

⑥ When the shaft has advanced to a position in which the flange surface of bearing housing [5] comes in contact with port housing [1], clamp them together by means of five hex socket head bolts [60] so that the drain is situated just below.

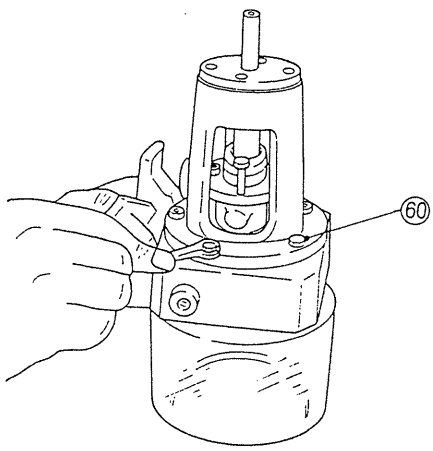

⑦ Clamp two bolts [61] of packing retainer [12] alternately to prevent uneven clamping. To stabilize gland packing [109] in seal case [7], first clamp them lightly by means of a wrench or similar tool, loosen them again, and reclamp them tightly by hand.

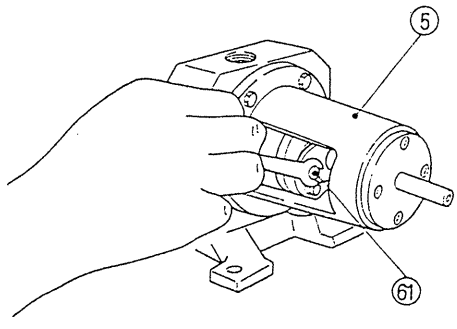

⑧ Mount dowel pin [53], gasket 1 [35] and side plate [2] in this order. Then mount the key, gear housing assy and cover. (Refer to the aforementioned procedure of reassembling the pumping unit.)

⑨ Couple the pumping unit with motor [91] and fix it onto base [74]. Confirm centering of the coupling with the motor. If the centers are not aligned, adjust them. Once centering is confirmed, make a trial run. After the trial run, mount coupling cover [76].

◆ Motor output 0.2, 0.4, 0.75kW: Less than 0.1mm
◆ Motor output 1.5, 2.2kW: Less than 0.2mm

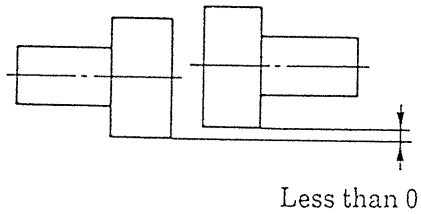

Less than 0.2 (0.1)

■ Trial Run

① At first, rotate coupling [77] manually without driving the motor so that packing [109] can conform. If the packing is too resistive for the coupling to be rotated, it means the clamping is too tight. Loosen the nuts of packing retainer [12]. It is believed possible to adjust the clamping of the packing during this first trial run. Even when the coupling is rotated easily, do not clamp it too tightly at this stage.

② Start up the pump as described in the "Operation" section. Adjust the clamping gradually, considering leakage (0.1 ~ 30cc / min) through the gland and a rise in temperature.

③ In the event the temperature rises too quickly, loosen nuts [64] and see what happens. If the leakage is too high, clamp it tighter.

- No leakage does not necessarily imply an ideal condition. Even when the gland leaks a little, do not panic and clamp it excessively.

[Disassembly and Mounting of Mechanical Seal] (Mechanical Seal Type GX Models)

■ Disassembly of Mechanical Seal

① Remove coupling cover [76]. Remove four bolts [81] from subbase [73] and detach the pump unit from the base.

② Disassemble the pump unit by following steps①~⑥ in the "Disassembly of Pump Unit" section.

③ Remove two nuts [64] which fasten seal case retainer [11] and move the seal case retainer and seal case assy [7] · [54] toward slinger [70].

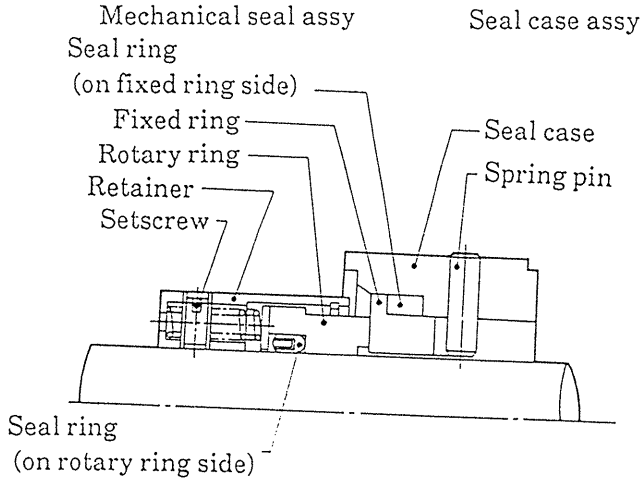

④ Remove five bolts [60] from the bearing housing [5] and pull out the bearing housing together with shaft [15] toward the motor. Mechanical seal assy [108] and seal case assy [7] · [54] can be detached as they are mounted on the shaft.
Note: Take care not to misplace gasket 4 [38].

⑤ Loosen two setscrews of the fixed ring of mechanical seal assy [108] to set it free from shaft [15].

⑥ Draw mechanical seal assy [108], seal case assy [7] · [54] and seal case retainer [11] to detach from shaft [15].

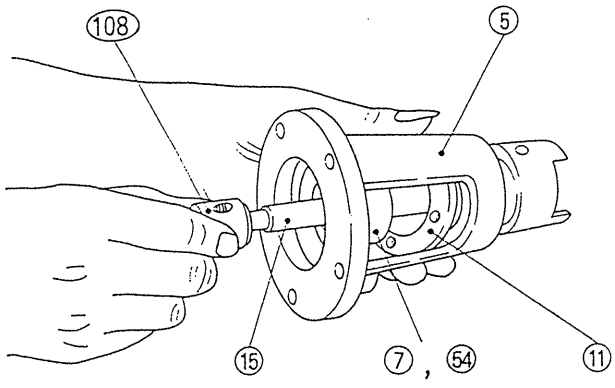

⑦ When the fixed ring and seal ring of the mechanical seal which is in seal case assy [7] · [54] pull out in the preceding step are pressed out, the parts on the fixed ring side can be disassembled. Hold a jig on the side opposite the sliding surface of the fixed ring, and press them out by means of a hand press or similar tool. They can then be disconnected.

■ Mounting of Mechanical Seal

① Attach the seal ring to the fixed ring, to which light oil has been applied.

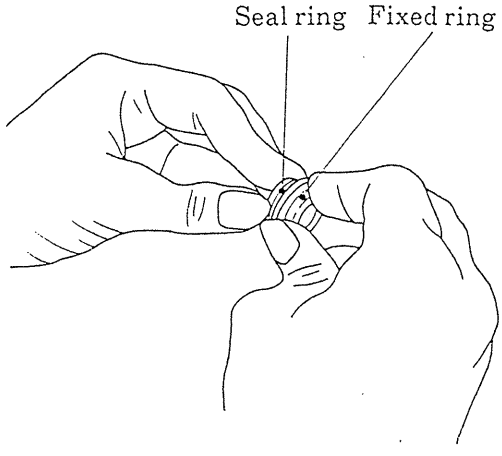

② Fit the fixed ring of the mechanical seal assy into seal case [7]. At that time, position the notch in the fixed ring to spring pin [54] of the seal case assy and insert the fixed ring until it comes in contact with the deep end of the seal case. Take care that the sliding surface is not scratched during insertion.

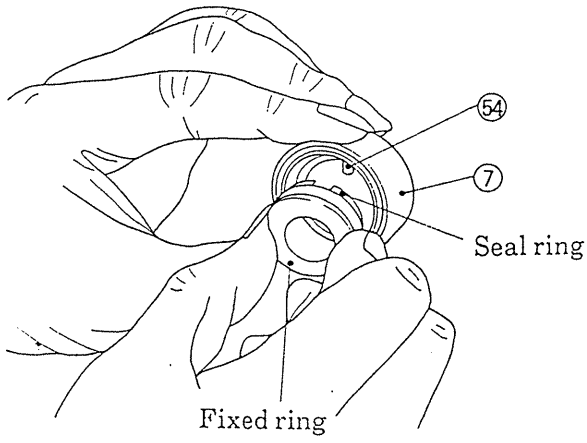

③ Clean the lap sliding surface of the fixed ring with a solvent such as MEK.

④ Mount seal case retainer [11] and then the seal case assy on shaft [15] inserted in bearing housing [5]. Make sure that the sliding side of the fixed ring is positioned opposite slinger [70]. Be careful that the surface of the shaft is not scratched by them.

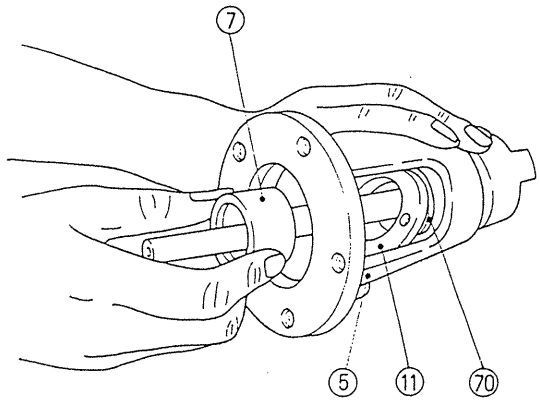

⑤ Apply silicone grease to the inside of the periphery of the seal ring mounted on the rotary ring side of the mechanical seal assy by using a tapered instrument. Clean the sliding surface of the rotary ring with a solvent such as MEK.

⑥ Hold the retainer on the rotary ring side of the mechanical seal assy by hand, and insert shaft [15] through its opening on the sliding surface side.

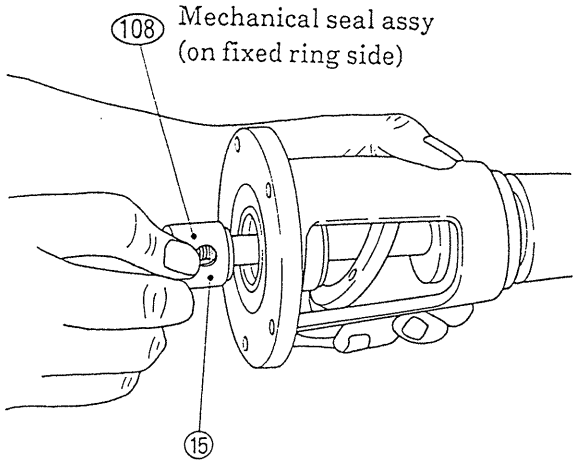

⑦ Position shaft [15] so that its shouldered surface is at the end of the retainer.

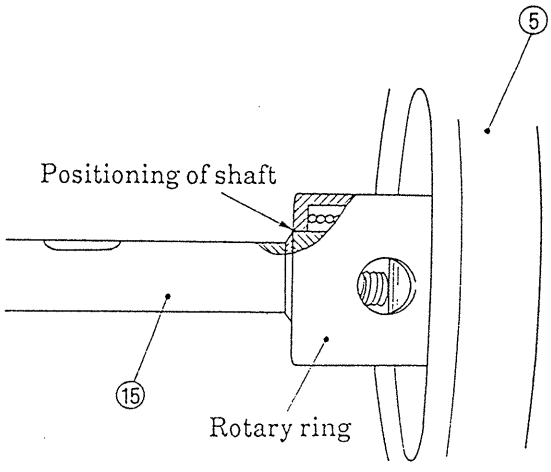

⑧ Clamp two set bolts of the mechanical seal assy to fix it to shaft [15].

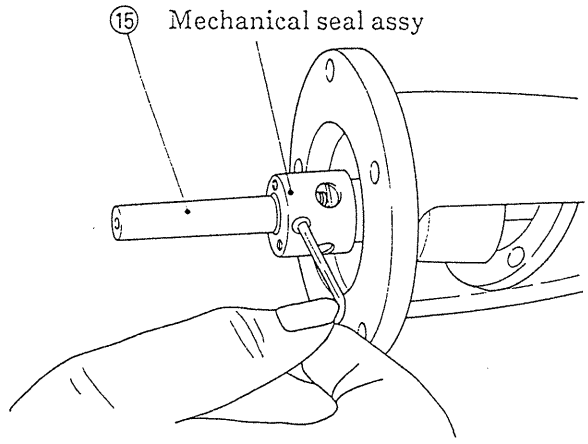

⑨ Carefully insert bearing housing [5] and end of shaft [15] into bearings [2] and [17] of port housing [1], and fix it by means of five bolts [57].

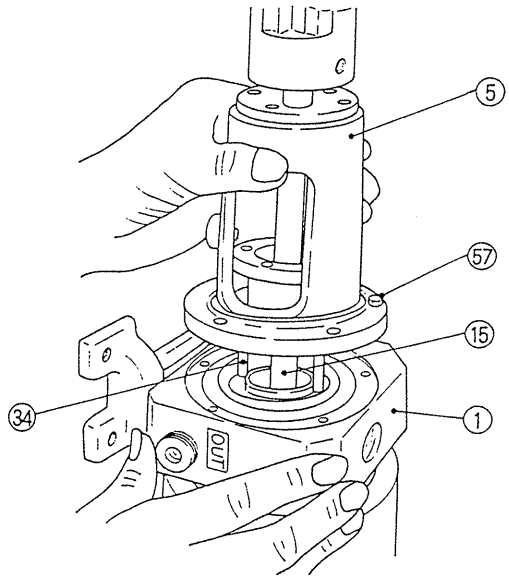

⑩ Insert stud bolts [34] fixed to port housing [1] into two holes of seal case retainer [11], insert spring washers, and clamp tightly by means of nuts [64]. Clamp the right and left nuts evenly.

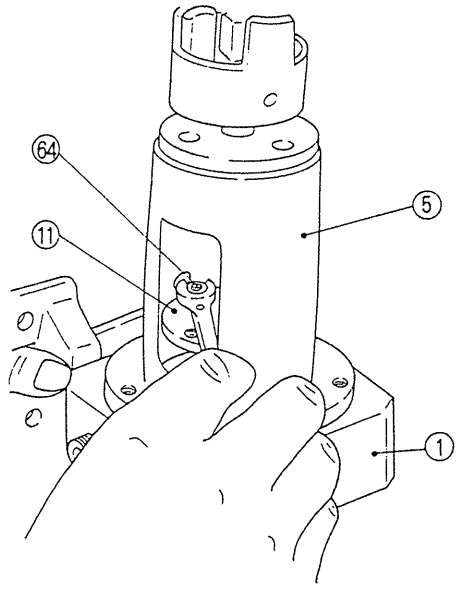

⑪ Rotate coupling [77] by hand to confirm that there is no binding.

⑫ Attach dowel pin [53], gasket 1 [35] and side plate [2] in this order. Then mount the key, gear, gear housing assy and cover. (Refer to the procedure of assembling the pump unit.)

⑬ Couple the pump unit with motor [91] and fix them onto base [74]. Confirm centering of the coupl with the motor. If the centers are not aligned, adjust them. After confirming the centering, mount coupling cover [76].

- Motor output 0.2, 0.4, 0.75kW: Less than 0.1mm
- Motor output 1.5, 2.2kW: Less than 0.2mm

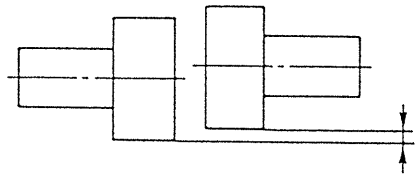

less than 0.2 (0.1)

◇ For torque limiter coupling, align the centers as follows (If your pump is equipped with torque limiter).

Bring both sprockets close to each other and adjust the centering to be within the above error allowance.

ⓐ Angle

Set them so that size C between the side surfaces of the teeth of two sprockets is equal throughout the peripheries and an error in angle is within 0.5°.

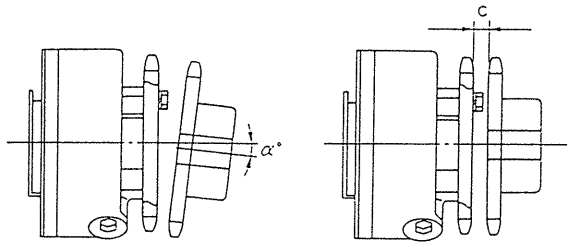

ⓑ Parallel

Hold a rectangular square on the bottom part of the teeth and align the centers so that the deviation is within a size ε. (Figure. 3)

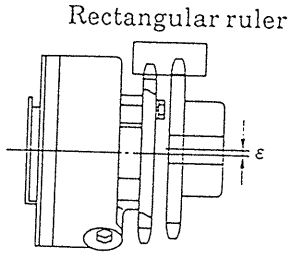

ⓒ Standard Error in Alignment

Model	Angle (deg)	Size C (mm)	Parallel ε (mm)
TGM 3-C	0.5	5.8	0.19
TGM 6-C	0.5	5.8	0.19
TGM 20-C	0.5	5.8	0.19
TGM 60-C	0.5	7.4	0.25
TL-200C	0.5	7.5	0.25
TL-250C	0.5	7.4	0.25

[Disassembly and Mounting of Shaft Assy]

■ Disassembly of Shaft Assy

① Disassemble up to step⑤ of "Disassembly of Gland Packing" or Step⑦ of "Disassembly of Mechanical Seal".

② Remove slinger [70] from shaft [15] by pulling.

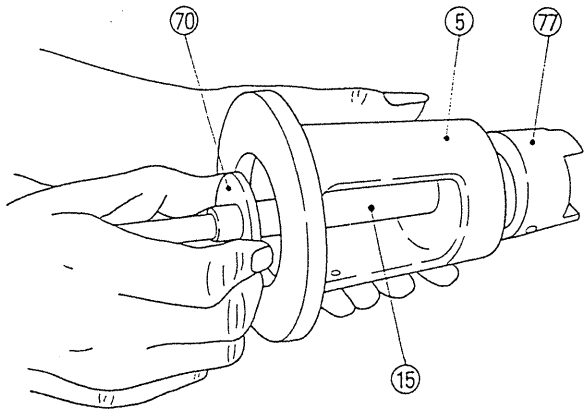

③ Loosen set bolt [84] to draw shaft [15] out of coupling [77] and remove key [22].

④ Remove four hex socket head bolts [57] and detach bearing cover [6]. Now, the shaft [15] unit can be disassembled from bearing housing [5].

⑤ When stop ring [52] is taken away, ball bearing [51] can be detached from shaft [15]. Since the ball bearing is press-fitted, detach it from the shaft carefully by means of a hand press or similar tool so as not to damage the shaft.

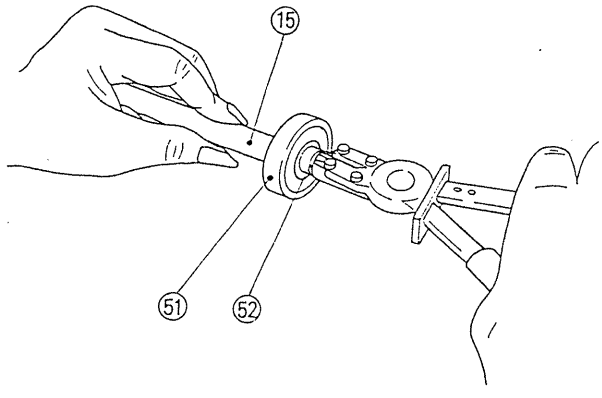

■ Mounting of Shaft Assy

① Insert the shaft unit into bearing housing [5], attach bearing cover [6] by means of four hex socket head bolts [57], and fix the shaft unit.

② Mount slinger [70] on shaft [15]. Set the slinger at innermost position.

③ Follow step ⑤ of "Mounting of Gland Packing" and step ⑨ of "Mounting of Mechanical Seal".

[Disassembly and Magnet of Magnet Capsule Unit]

■ Disassembly of Magnet Capsule Unit

The magnets used in the pump have high magnetic force. Be careful not to let your finger or hand be caught by them while disassembling or mounting the magnet capsule unit.

① Remove pinion [14] and key [21] by following step ①~⑥ of the "Disassembly of Pump" section. Detach the key carefully so as not to scratch the carbon bearing or shaft. (Do not tap the shaft.)

② Remove four hex socket head bolts [58] and detach the pump portion ahead of sub-bracket [31] from bracket [32]. In this step, the surface of seal case [102] is prone to rub the inside of the drive magnet. Securely hold the bottom of port housing [1] by hand, and pull it out toward you horizontally. Subsequent work can be carried out easily when the pulled-out shaft portion is placed upright on a hollow cylinder.

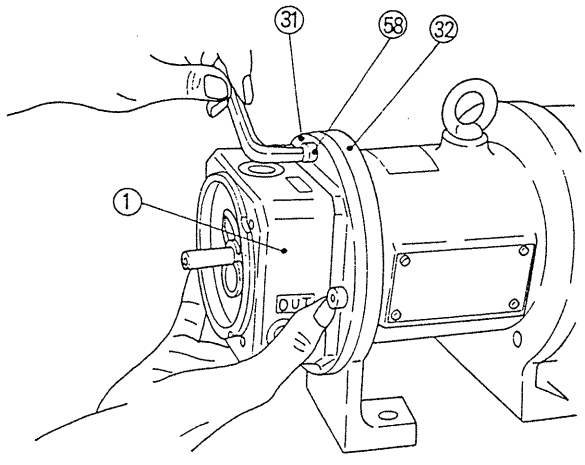

③ Detach sub-bracket [31] from port housing[1]. Take care not to scratch the surface of seal case [102].

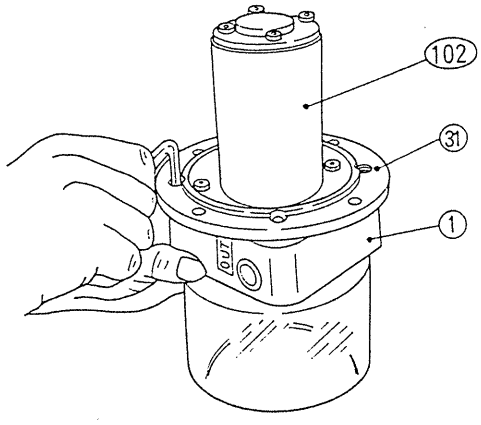

④ Remove five bolts [60] from the seal case unit on which the bearing holder unit is mounted, and detach the seal case unit from port housing[1]. Pull it out straight to prevent the end of the shaft of magnet capsule unit [104] from damaging the bearing in the bearing holder unit.

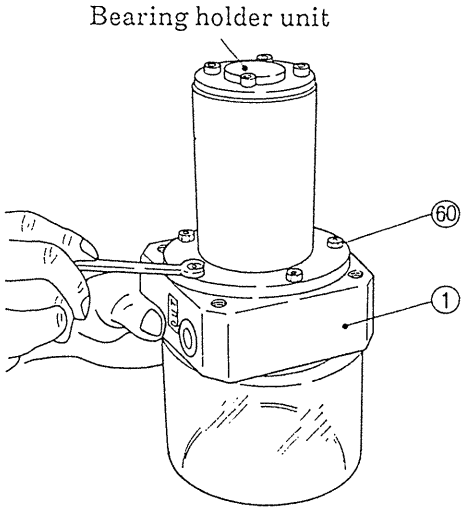

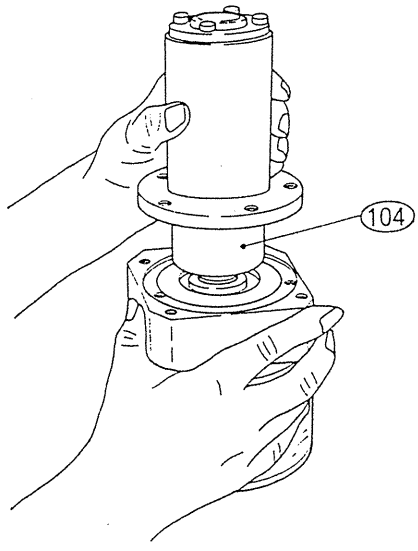

⑤ If the bearing in the bearing holder unit has worn out, remove four hex socket head bolts [58] and replace the bearing holder unit with a new one.

⑥ Draw out magnet capsule unit [104] so as not to damage bearings [17] and [19]. Take care not to misplace spacers [23].

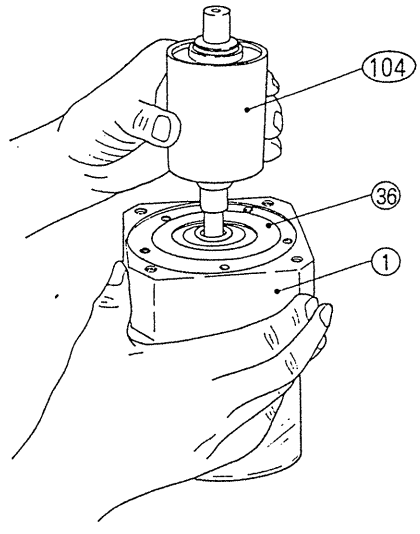

■ Mounting of Magnet Capsule Unit

① Put port housing [1] on a cylindrical jig and fit O ring [36] in the groove.

② Insert spacers [23] on both sides of the shaft of the magnet capsule unit. (In a GX/M-12 pump, three spacers [23], i.e., two on the gear side of the shaft and one on the bearing holder unit side, are inserted.)

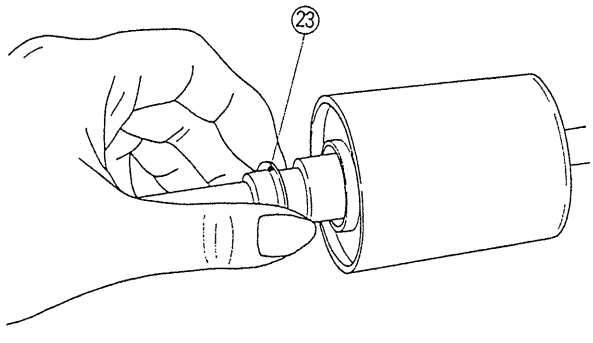

③ Press bearings [17] and [19] in slowly, rotating them gradually, until they come in contact with the side of shaft [15] provided with a key groove. Do this very carefully lest the bearings should break or fall.

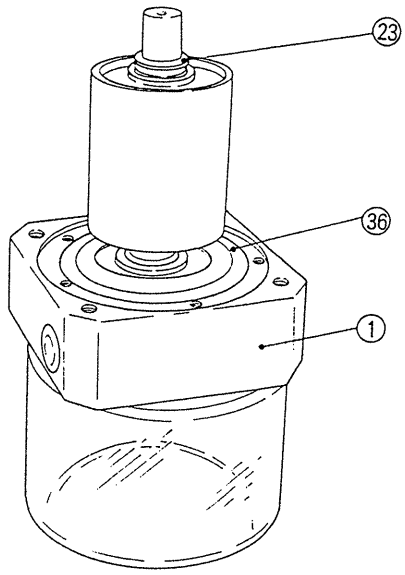

④ Mount the seal case unit fitted with bearing holder unit [110] on port housing [1]. At that time, confirm that O ring [36] fits precisely into the groove. When the shaft of the magnet capsule unit is properly inserted into the bearings in the bearing holder, the flange surface of the seal case unit comes in contact with the port housing.

⑤ Clamp it uniformly by means of five hex head bolts [60]. Care should be taken, as liquid may leak if the clamping is insufficient or uneven.

⑥ Attach sub-bracket [31].

⑦ Hold port housing [1] firmly and mount it on the bracket. In this process, the surface of the seal case tends to come in contact with the inside of the drive magnet. Therefore, the port housing should be inserted horizontally. Take care not to let your hand be caught by the strong magnetic force.

⑧ Fix it by means of four hex socket head bolts [121].

⑨ Attach dowel pin[53], gasket 1 [35] and side plate [2] in this order to the port housing. Then fit the key, gear, gear housing, gear housing assy and cover.

STRUCTURE AND NAMES OF PARTS (GX TYPE)

Diagram of Structure of Pumping Unit
<Gland Packing Type>

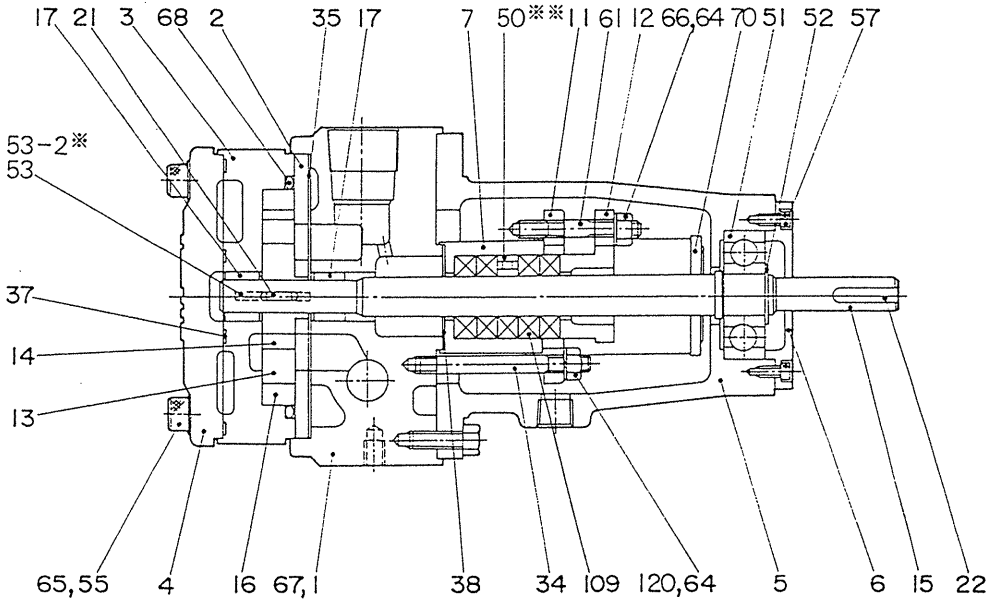

Diagram of Disassembly of Pumping Unit

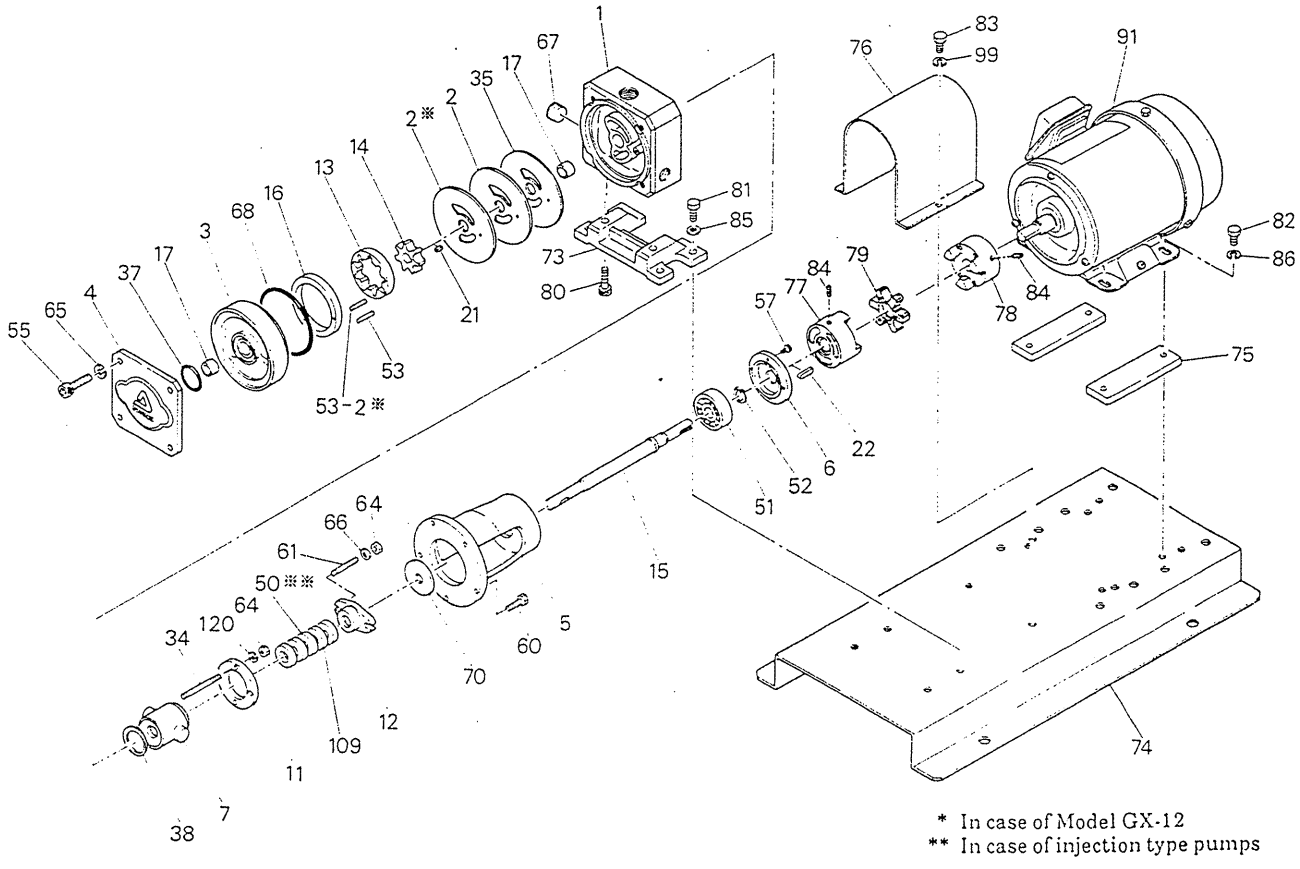

* In case of Model GX-12
** In case of injection type pumps

Diagram of Structure of Pumping Unit
<Mechanical Seal Type>

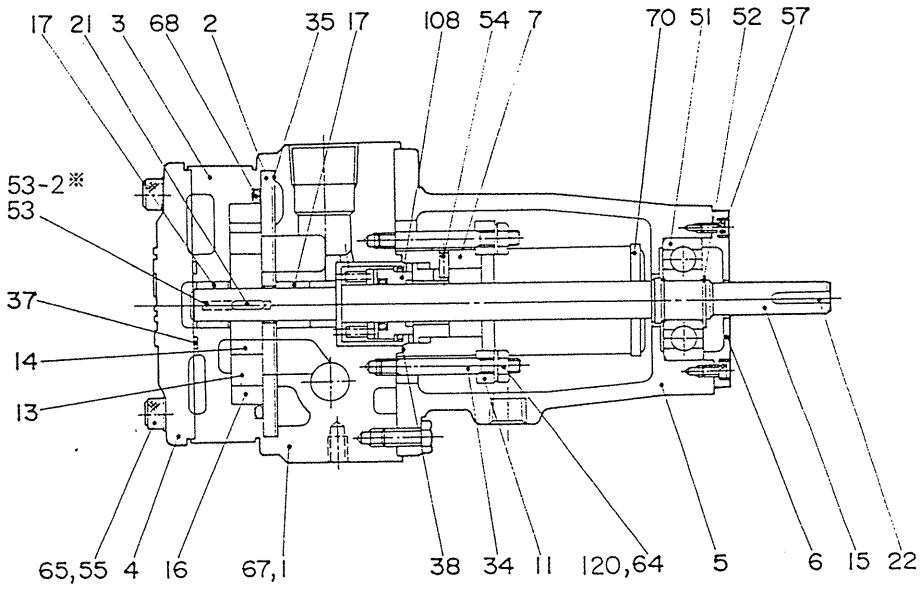

Diagram of Disassembly of Pumping Unit

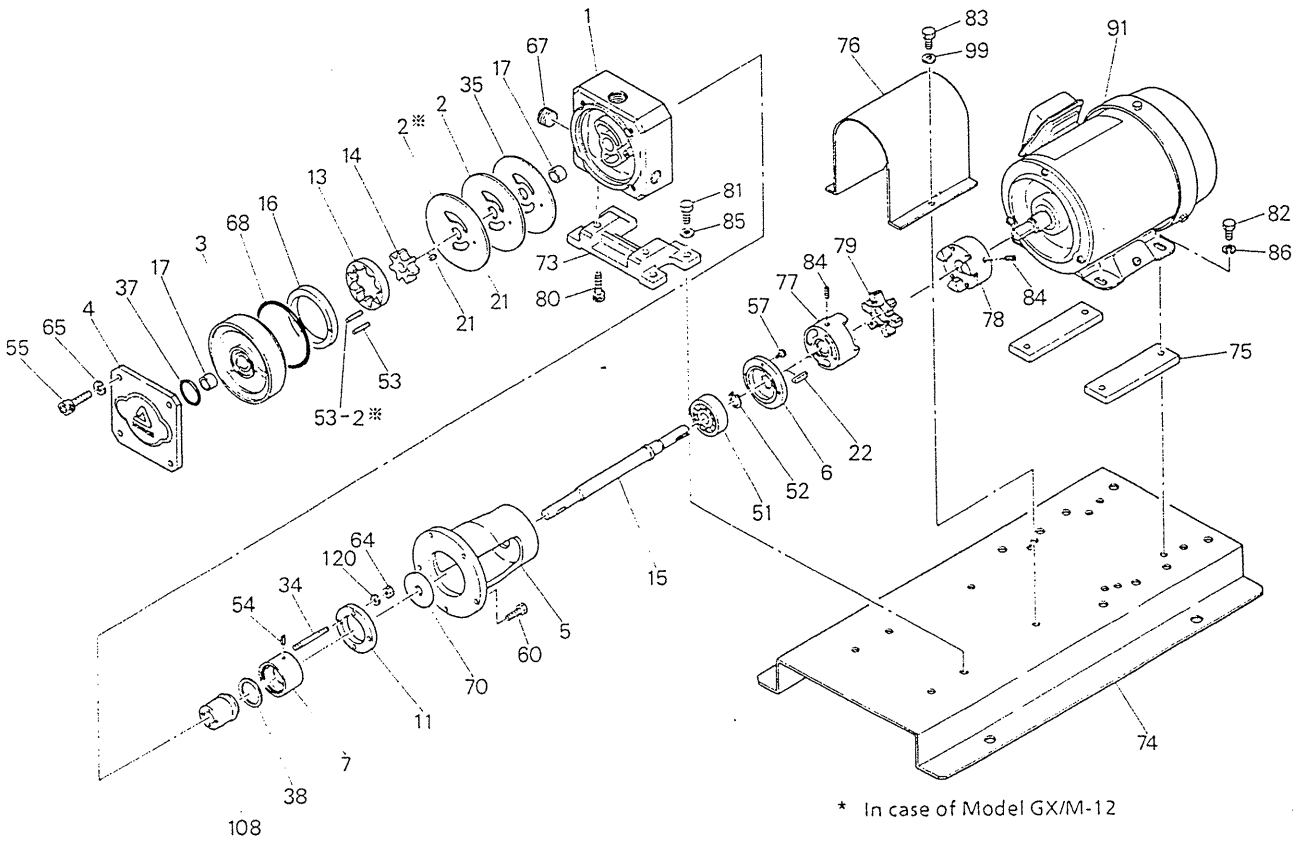

■ GX Type

No.	Name		Number	Remarks		
				GX-12&15	GX-25	GX-32
1	Port housing		1			
2	Side plate		1			
3	Gear housing		1			
4	Cover		1			
5	Bearing housing		1			
6	Bearing cover		1			
7	Seal case		1			
11	Seal case retainer		1			
12	Packing retainer		1			
13	Internal gear		1			
14	Pinion		1			
15	Shaft		1			
16	Bearing 1		1			
17	Bearing 2		1			
21	Key		1			
22	Key		1			
34	Stud bolt		2			
35	Gasket		1			
37	O ring		1	P22A	P30	P42
38	Gasket		1			
50	Lantern ring		1			
51	Ball bearing		1	6301LLU	6303LLU	6304LLU
52	Stop ring		1	12 for shaft	17 for shaft	20 for shaft
53	Dowel pin		1	h7A−2.5×20	h7A−3×28	h7A−3×32
53	Dowel pin (for GX-12)		1	h7A−2.5×12		
53-2	Dowel pin (for GX-12)		1	h7A−1.6×12		
54	Spring pin		1	3AW10ℓ		3AW12ℓ
55	Hex socket head bolt		4	M6×40	M10×50	M12×65
57	Hex socket head bolt		4	M3×5	M4×6	M5×10
60	Hex head bolt		5	M5×15	M6×15	M8×17
61	Stud bolt		2			
64	Hex nut	for mechanical seal	2	for M5	for M6	
		for gland packing	4	for M5	for M6	
65	Spring washer		4	for M6	for M10	for M12
66	Washer		2	for M5	for M6	
67	Hex socket head tapered screw plug		1	PT3/8	PT3/4	PT1
68	O ring		1	G65	G95	G115
70	Slinger		1			
73	Sub-base A		1			
74	Base		1			
77	Coupling P		1			
78	Coupling M		1			
79	Coupling rubber		1			
80	Cap bolt		2	M6×20	M8×25	M10×35
81	Hex bolt		4			
82	Hex bolt		4			
83	Hex bolt		2	M6×15		
84	Setscrew		2	M6×10	M8×10	
85	Spring washer		4	for M6	for M8	for M10
86	Spring washer		4			
91	Motor		1			
99	Spring washer		2	for M6		
108	Mechanical seal		1			
109	Gland packing		1			
120	Spring washer		2	for M5	for M6	

STRUCTURE AND NAMES OF PARTS (GM TYPE)

Diagram of Structure of Pumping Unit

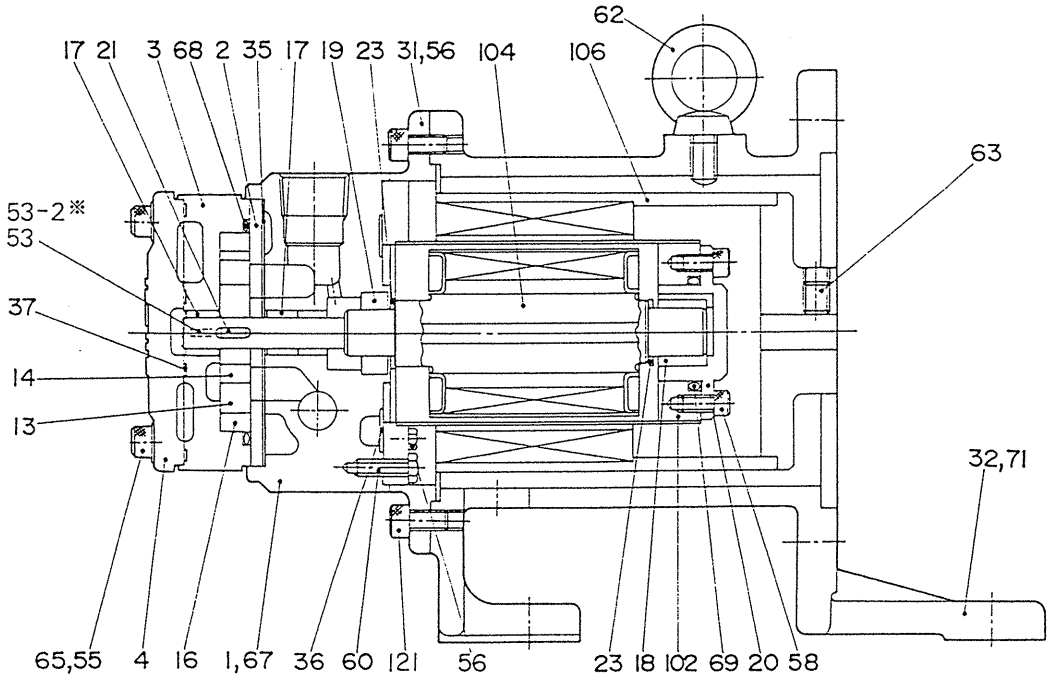

Diagram of Disassembly of Pumping Unit

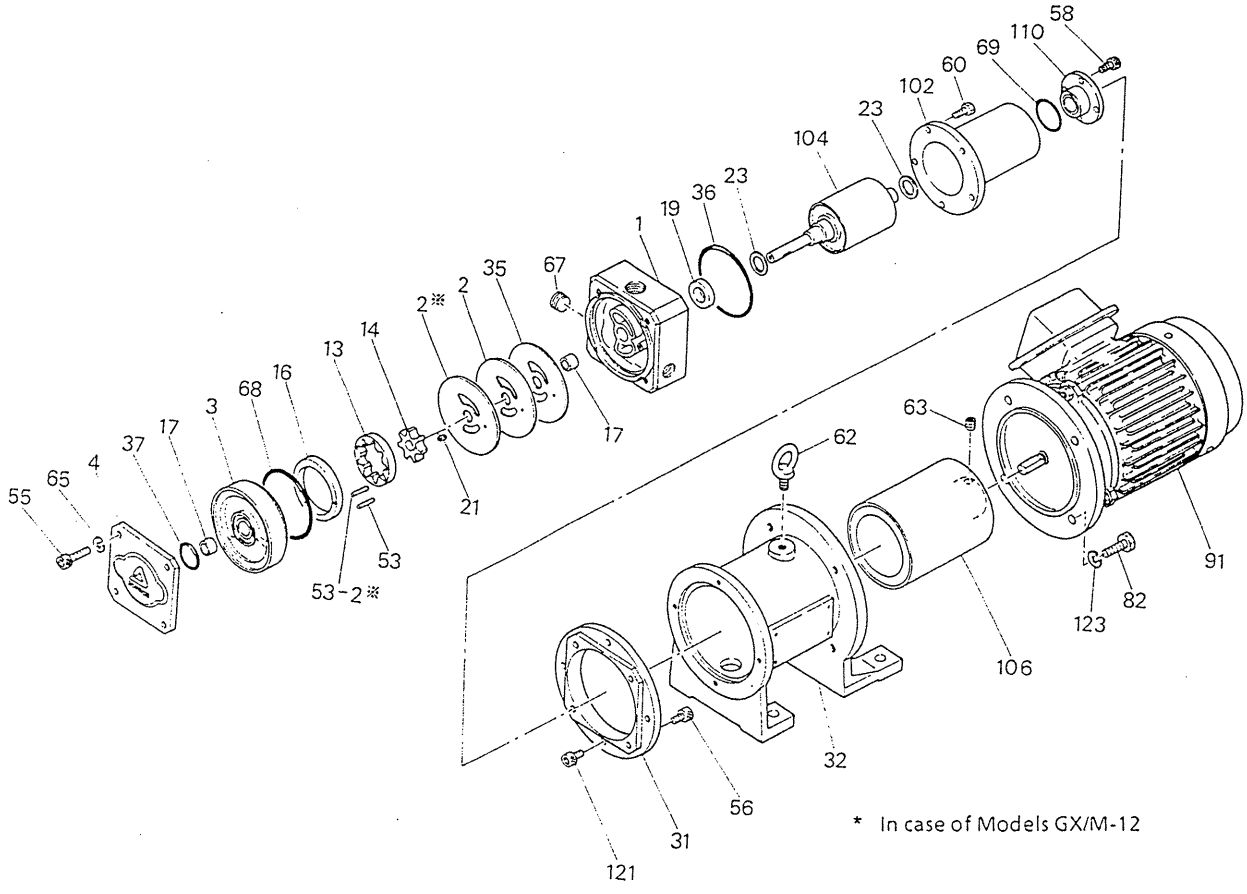

* In case of Models GX/M-12

■ GM type

No.	Name	Number	Remarks		
			GM-12&15	GM-25	GM-32
1	Port housing	1			
2	Side plate	1			
3	Gear housing	1			
4	Cover	1			
13	Internal gear	1			
14	Pinion	1			
16	Bearing 1	1			
17	Bearing 2	2			
19	Bearing	1			
21	Key	1			
23	Spacer	2 (3) *			
31	Sub-bracket	1			
32	Bracket	1			
35	Gasket	1			
36	O ring	1	G70	G85	JASCO3118
37	O ring		P22A	P30	P36
53	Dowel pin	1	h7A－2.5×2	h7A－3×28	h7A－3×32
53-1	Dowel pin	1	h7A－2.5×12		
53-2	Dowel pin	1	h7A－1.6×12		
55	Hex socket head bolt	4	M6×40	M10×50	M12×65
56	Hex socket head bolt	4	M6×12	M8×15	
58	Hex socket head bolt	4	M5×10※		M8×15
60	Hex head bolt	5	M5×12	M8×15	M8×15
62	Eyebolt	1	for M8	for M10	
63	Setscrew	2		M8×10	M8×8
65	Spring washer	4			
67	Hex socket head bolt tapered screw plug	1	PT3/8	PT3/4	PT1
68	O ring	1	G65	G95	G115
69	O ring	1	G30		G55
82	Hex head bolt	4	M8×25	M10×25	M12×25
91	Motor	4			
102	Seal case	1			
104	Magnet capsule	1			
106	Drive magnet ass'y	1			
110	Bearing holder unit	1			
121	Hex socket head bolt	1	M6×15	M8×20	M10×20
123	Spring washer	4	for M8	for M10	for M12

※ ( ) for GM-12

CONSUMABLE PARTS

The parts listed as below are consumable parts. To ensure long time operation of pump, replace the consumable parts at every life time shown on the list.

Part No.	Parts name	Q'ty/pump	Remarks	Life time
2	Side plate	1	GX type & GM type	10,000 hours
3	Gear housing	1		
13	Internal gear	1		
14	Pinion	1		
15	Shaft	1		
16&17	Bearing	1 set		
109	Gland packing	1 set		
108	Mechanical seal	1 set		
35&38	Gasket	1 set		
37&68	O ring	1 set		
51	Ball bearing	1		
19	Bearing	1	GM type	10,000 hours
23	Spacer	2		
36&69	O ring	1		
110	Bearing holder unit	1 set		

Note 1. Above mentioned life time is based on pumping clear water at ambient temperature and it depends on the characteristics of pumped liquid and other condition.

2. O ring and gasket must be replaced every time when pump is disassembled regardless of the life time mentioned as above.

3. Parts No. correspond to that on pages 34 to 38.

REFERENCE MATERIAL FOR PIPING

■ Study of Conditions of Suction

The diameters of the suction-side connection of the G-series are:
PT1/2 for GX-12 and 15, and PT1 for GX-25. Nevertheless, it is sometimes preferable, depending on the viscosity of the liquid to be handled and the pump rpm, to make the diameter of the piping larger than the connection diameter of the pump. For further details, please contact us.

① Guideline of Suction-Side Piping Diameter

To be precise, NPSH has to be considered but the chart below may give a guideline of the suction-side piping diameter. However, the diameter obtained from the chart is on the condition that the length of piping is less than 1 meter.

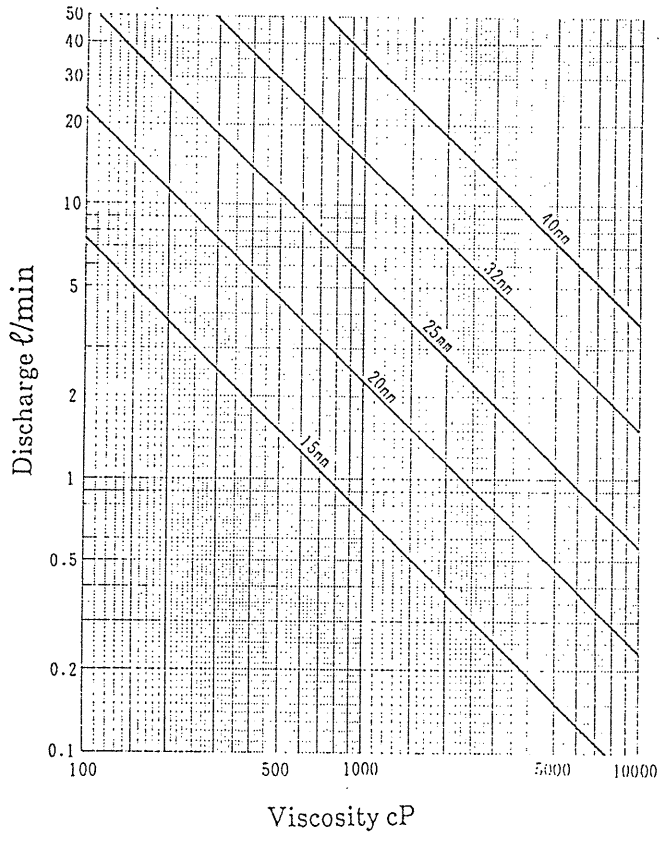

② Study on NPSH

Plan your conditions of suction so as to satisfy the following requirement:

NPSHa > NPSHr

ⓐ NPSHr

Each pump has its own NPSHr which is determined by the viscosity of liquid to be handled and rpm of the pump. The NPSHr value for your conditions of use can be obtained from the chart on the following page. If the viscosity exceeds 1000cP, multiply the value of NPSHr obtained from the chart by a constant Kf at each viscosity.

[NPSHr Values with Viscosities Ranging from 1 to 1000cP]

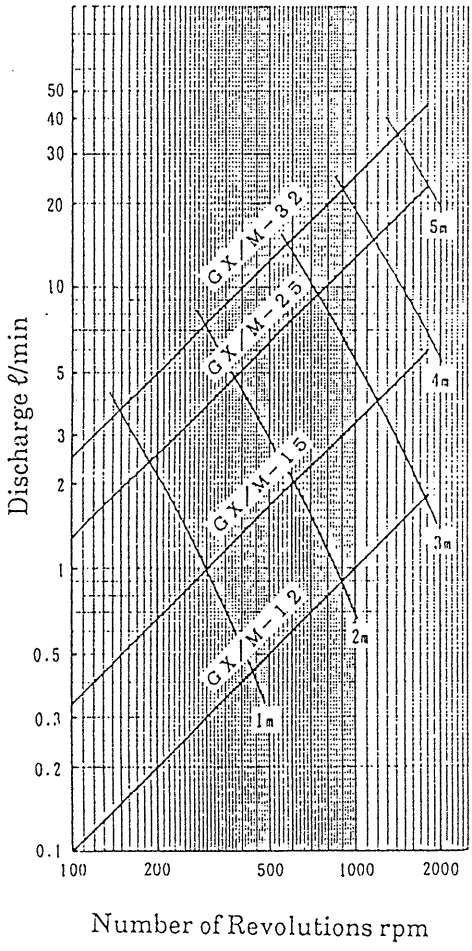

[NPSHr Values with Viscosities Ranging from 1 to 1000cP]

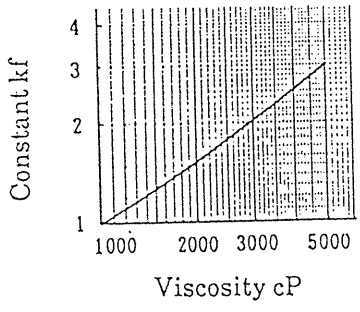

ⓑ NPSHa

- In case of suction-system pumps

$$\text{NPSHa}\ \frac{(Pa-Pv)\times 10}{r}-hs-hfs$$

- In case of pressure-system pumps

$$\text{NPSHa}\ \frac{(Pa-Pv)\times 10}{r}+hs-hfs$$

Pa : Pressure exerted on the suction liquid surface (kgf/cm2A absolute pressure)

Pv : Vapor pressure of stored liquid (kgf/cm2A absolute pressure)

hs : Height of the normal surface of the pump measured from the suction liquid surface.

hfs: Friction resistance of piping on the suction side (m) (note)

r : Specific gravity of liquid

1 bar = 1.033kgf/cm2 = 10.33m (water column)

Note: For calculation of the friction resistance of the suction-side piping, see the following section.

- Suction-system pump

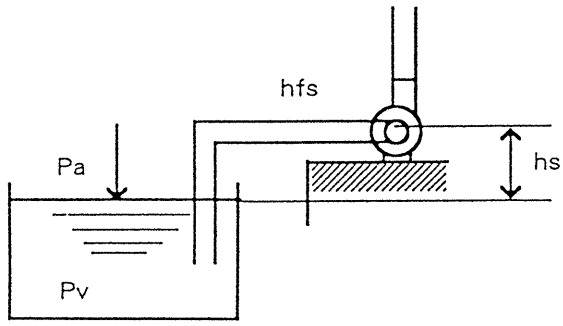

- Pressure-system pump

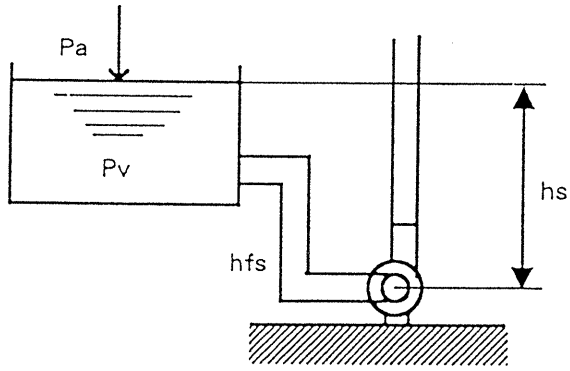

■ Selection of Diameter and Length of Piping

Do not simply select a piping of the same diameter as the discharge diameter of your pump. First, obtain the friction resistance of the piping, and then decide on a diameter and length of piping such that the total of the piping friction resistance and lift is less than the pressure specified for your pump. In case a heavy slurry liquid is to be handled, the sedimentation speed of the liquid should be taken into account in deciding the diameter and length of piping.

◇ Friction resistance of piping

Friction resistance of piping $hf = f \cdot \frac{L}{D} \cdot \frac{V^2}{2g}$

Coefficient of friction $f = \frac{64}{Re}$ (See Note 1)

Reynolds number $Re = \frac{DV}{\gamma}$

D: Inside diameter of pipe (m)

V: Flow rate in pipe (m/sec)

γ: Coefficient of kinetic viscosity (m^2/sec) (See Note2)

L: Length of piping (See Note 3)

g: Acceleration of gravity (=9.8m/sec^2)

Note 1

Use coefficient of friction f when Re <2100. In case RE>2100, use f=0.03.

Note 2

Coefficient of kinetic viscosity (cm^2/sec) (=stokes) $= \frac{\text{Absolute coefficient of kinetic viscosity (=poise) (g/cm.sec)}}{\text{Density(g/cm}^2\text{)}}$

Ex. When 30000cm poise density is 1.5,

$$\gamma = \frac{30000 \times 10^{-2}}{1.5} = 200\text{cm}^2\text{/sec (stokes)}$$

$\therefore \gamma = 200 \times 10^{-4} = 2.0 \times 10^{-2}$ (m^2/sec)

Note3

If there is an elbow, valve, etc., inside the piping, each should be taken into account after converting into a corresponding length of piping.

Ex.	2" 90° elbow	corresponds to 2.6m
	2 1/2" 90° elbow	corresponds to 2.9m
	3" 90° elbow	corresponds to 3.4m
	2" gate valve	corresponds to 0.5m
	2 1/2" gate valve	
	3" gate valve	corresponds to 0.6m

◇② Sedimentation speed of slurry

Obtain the sedimentation speed in the carrying liquid and select a diameter of piping such that the flow rate exceeds the sedimentation speed.