Doc. No.	NDP 187M-08

MAINTENANCE MANUAL

YAMADA AIR-OPERATED DIAPHRAGM PUMPS

NDP-20
NDP-25
NDP-32

⚠ WARNING

- For your own safety, be sure to read these procedures carefully before performing maintenance on this product. After reading this document, be sure to keep it handy for future reference.

This maintenance manual covers what you should know about maintenance of the Yamada NDP-20 series and NDP-25 and NDP-32 series Diaphragm Pumps.
This edition is based on the standards for the March 2011 production run. Remember, the specifications are always subject to change; therefore, some of the information in this edition may not apply to new specifications.

·Warnings and Cautions

For safe use of this product, be sure to note the following: In this document, warnings and cautions are indicated by symbols. These symbols are for those who will operate this product and for those who will be nearby, for safe operation and for prevention of personal injury and property damage. The following warning and caution symbols have the meanings described below. Be sure to remember their meanings.

⚠ WARNING : If you ignore the warning described and operate the product in an improper manner, there is danger of serious bodily injury or death.

⚠ CAUTION : If you ignore the caution described and operate the product in an improper manner. There is danger of personal injury or property damage.

Furthermore, to indicate the type of danger and damage, the following symbols are also used along with those mentioned above:

This symbol indicates a DON'T, and will be accompanied by an explanation on something you must not do.

This symbol indicates a DO, and will be accompanied by instructions on something you must do in a certain situation.

⚠ WARNING

- Before starting maintenance work, cut off the feed air and clean the pump. If air pressure or residue remain in the pump, there is danger of explosion,or possible poisoning resulting in serious injury or death if chemicals adhere to the skin or are accidentally swallowed. (For details on cleaning the pump, refer to Chapter 6 of the operating manual.)
- When replacing parts, be sure to use the recommended genuine parts or Equivalents. Use of other parts may cause a malfunction of the product. (Refer to Exploded View and Reminder to order correct item on the separate sheets.)

⚠ CAUTION

- When it is instructed that special tools must be used, be sure to use the specified tools. Otherwise, the pump may be damaged.
- Refer to 10.1 "Specifications" in the Operating Manual. Also, remember that the pump is heavy, and extreme care must be taken when lifting it.

Table of Contents

·Warnings and Cautions
·Table of Contents
1. Principles of operation ····· 1
2. Tools, etc.
2.1 General tools ····· 1
2.2 Special tools ····· 1
2.3 Misc. ····· 1
3. Ordering Replacement parts ····· 1
4. Balls and Valve seats
4.1 Removal
■BA□[-D], BS□, BF□ types ····· 2
■BP□, BV□ types ····· 3
4.2 Inspection ····· 4
4.3 Installation ····· 4
5. Diaphragm and Center rod
5.1 Removal
■BA□[-D], BS□, BF□ types ····· 5
■BP□, BV□ types ····· 5
5.2 Inspection ····· 6
5.3 Installation
■B□C[-D], B□N[-D], B□E, B□V, B□H[-D], B□S, B□H/T types ····· 7
■B□T[-D] types ····· 7
6. Throat bearing and Pilot valve Assembly
6.1 Removal ····· 8
6.2 Inspection ····· 8
6.3 Installation ····· 8
7. C Spool Valve Assembly and Sleeve Assembly
7.1 Removal ····· 9
7.2 Inspection ····· 9
7.3 Installation ····· 9
8. Retightening of Tie rods ····· 10

1. Principles of operation

There are two diaphragms fixed to the center rod, one at each end. When compressed air is supplied to air chamber b (right side, see Fig.1.1), the center rod moves to the right, the material in material chamber B is pushed out, and at the same time material is sucked into material chamber A.
When the center rod is moved full-stroke to the right, the air switch valve is switched, compressed air is sent to air chamber a (left side, see Fig.1.2), and the center rod moves to the left. The material in material chamber A is pushed out, and at the same time material is sucked into material chamber B.
Through repetition of this operation, material is repeatedly taken in and discharged out.

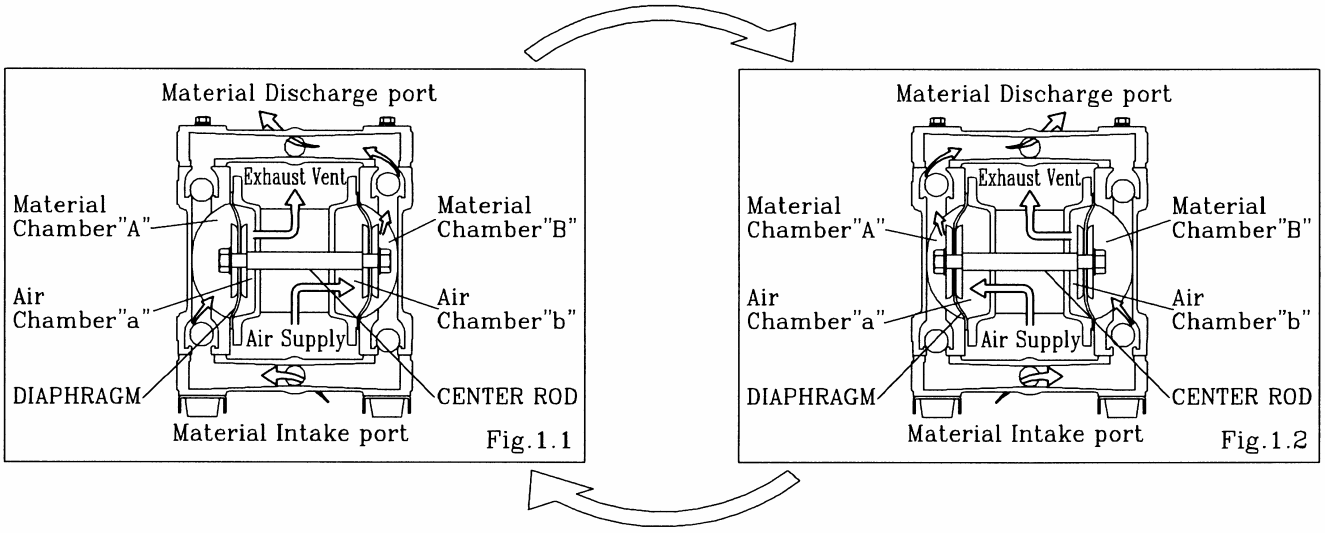

2. Tools, etc.

2.1 General tools

·Socket wrenches	10mm, 12mm, 13mm, 17mm, 22mm
·Hexagonal box wrenches	5mm
·Open-end wrenches	13mm (BP□, BV□), 22mm (BA□[-D], BS□, BF□)

2.2 Special tools

·Accessory tool (Included)
Purpose: Removing the center disk of BP□ and BV□ types

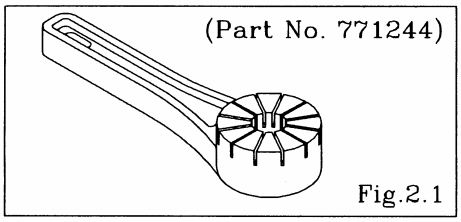

·Sleeve remover (sold separately)
Purpose: For removing sleeves

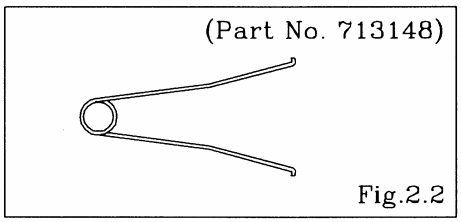

2.3 Misc.

·Assembly oil	Turbine oil none addition class 1(equivalent to ISO VG32 grade)
·Nuts	M14×1.5
·Grease	Urea grease grade (NLGI) No. 2
·Lubricants	Equivalent to LOCTITE ANTI-SEIZE 767

3. Ordering Replacement parts

For accurate and speedy shipment of parts, be sure to order the right parts for your model to distributor.
Indicate the part numbers, descriptions, and quantities.

4. Balls and Valve seats

4.1 Removal

■BA□[-D], BS□, BF□ types

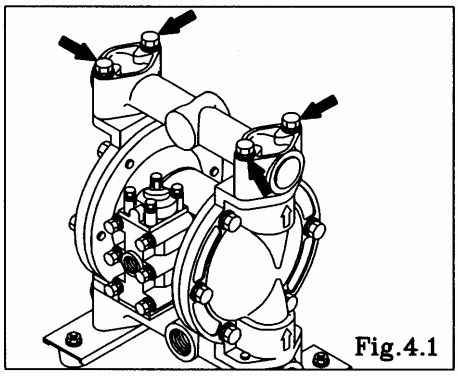

Fig.4.1

- Remove the 4 retainer bolts from the out manifold, and remove the out manifold. [Fig.4.1]

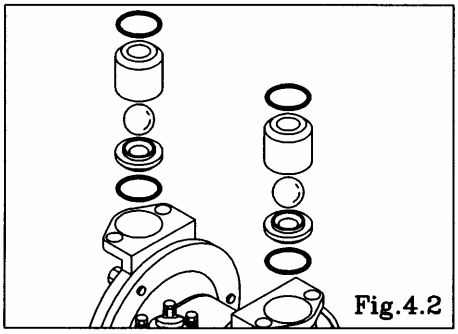

Fig.4.2

- Remove the O ring, valve stopper, ball and valve seat. [Fig.4.2]

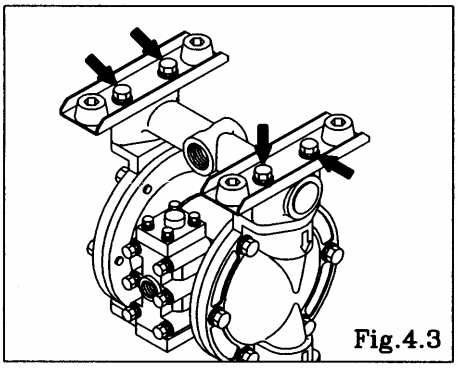

Fig.4.3

- Turn over the main body assembly. [Fig.4.3]
- Remove the 4 retainer bolts from the in manifold, and remove the in manifold and pump bases. [Fig.4.3] (BA□-D and NDP-32 do not have bases.)

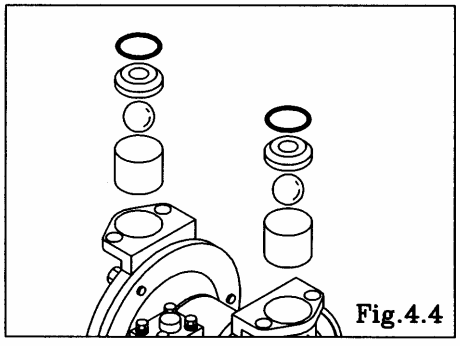

Fig.4.4

- Remove the O ring, valve seat, ball and valve stopper. [Fig.4.4]

■BP□, BV□ types

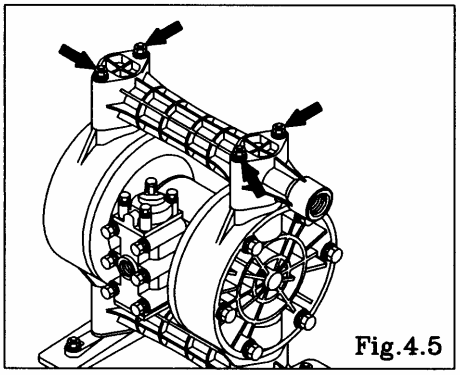

Fig.4.5

▪ Remove the 4 retainer nuts from the upper side of tie rods, and remove the out manifold. [Fig.4.5]

<NOTE>

▪ When the retainer nuts both sides of the tie rod remove, the in manifold removes.

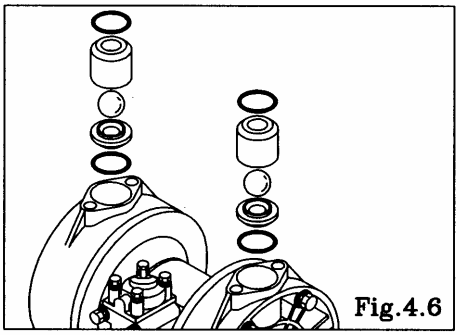

Fig.4.6

▪ Remove the O ring, valve stopper, ball and valve seat. [Fig.4.6]

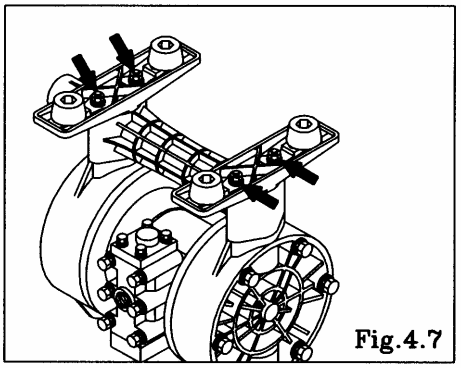

Fig.4.7

▪ Turn over the main body assembly. [Fig.4.7]
▪ Pull out the tie rod, and remove the base and in manifold. [Fig.4.7]

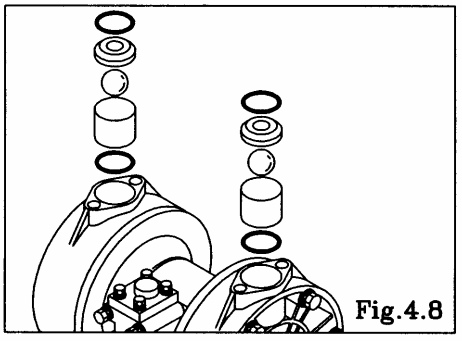

Fig.4.8

▪ Remove the O ring, valve seat, ball and valve stopper. [Fig.4.8]

4.2 Inspection

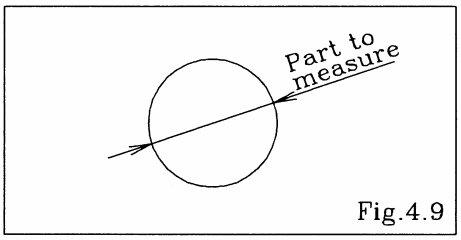

Fig.4.9

▪ Ball [Fig.4.9]
Measure the outside diameter, and if it is outside the usable range, replace the ball.

Usable range of Ball

NDP-20	SØ24.3 ~ SØ27.8 mm
NDP-25 NDP-32	SØ31.5 ~ SØ36.1 mm

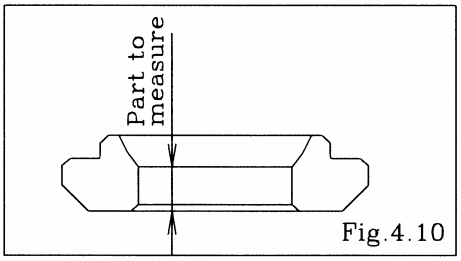

Fig.4.10

▪ Valve seat [Fig.4.10]
Measure the dimension shown at left, and if it is outside the usable range, replace the valve seat.

Usable range of Valve seat

	BA□, BS□, BF□	BP□, BV□
NDP-20	3.4 ~ 8.5 mm	3.3 ~ 8.1 mm
NDP-25 NDP-32	3.8 ~ 9.5 mm	3.4 ~ 9.5 mm

▪ O ring (other than PTFE)
If O rings are worn out or cracked, replace them.

4.3 Installation

For installation, see [Exploded View] on the separate sheet and install in the reverse order of disassembly.

Tightening torque for manifold retainer bolts

		C, N, E, V, H, S	T
NDP-20	BA□	10 N・m	20 N・m
	BS□		
	BA□-D	10 N・m	15 N・m
NDP-25 NDP-32	BA□	10 N・m	35 N・m
	BS□		
	BF□		

Tightening torque for manifold retainer nuts

		C, N, E, V, H, S	T
NDP-20	BP□	10 N・m	12 N・m
NDP-25	BP□		
	BV□		

▪ NDP-20B□H/T, NDP-25B□H/T type be with 10N・m tightening.

<NOTE>
- ▪ Make sure there is no dust on the seal surface and the seal is not damaged.
- ▪ Replace the PTFE O ring regardless of its condition.
- ▪ Apply Lubricant (equivalent to LOCTITE ANTI-SEIZE 767) to tie-rod thread. (BP□, BV□ type)

5. Diaphragm and Center rod

5.1 Removal

■BA□[-D], BS□, BF□ types

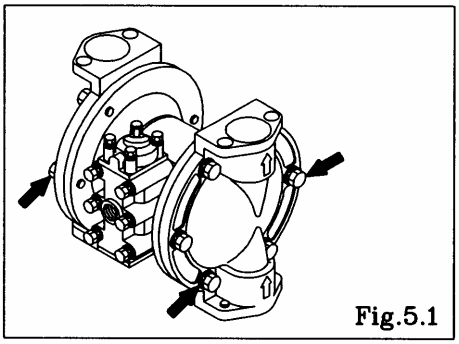

Fig.5.1

- Remove the ball and valve seat etc. (see [4.1 Removal BA□[-D], BS□, BF□ types])
- Remove the 12 retainer bolts from the out chamber, and remove the out chamber. [Fig.5.1]

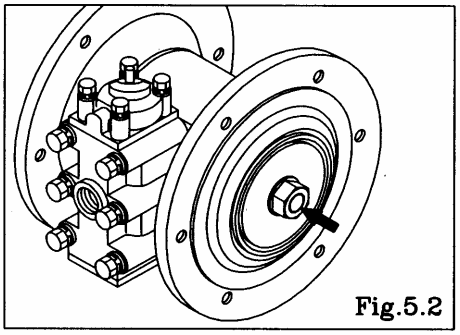

Fig.5.2

- Remove the nuts on both sides of the center rod. [Fig.5.2]
- After the nuts on one side have been removed, remove the center disk and diaphragm. Remove the diaphragm, center disk and center rod from the opposite side of the main body.

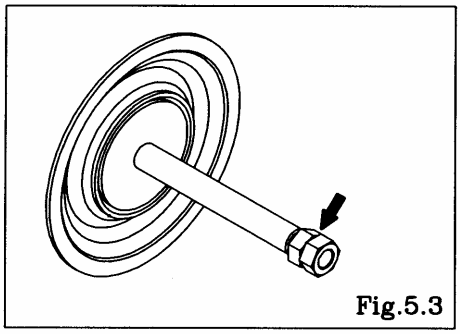

Fig.5.3

- Remove the nuts on the opposite side using the double nut. [Fig.5.3]
- Remove the coned disk spring, center disk and diaphragm.

■BP□, BV□ types

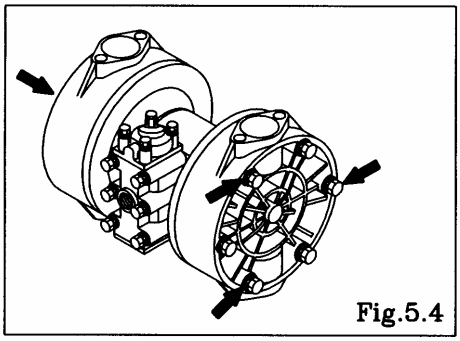

Fig.5.4

- Remove the ball and valve seat etc. (see [4.1 Removal BP□, BV□ types])
- Remove the 12 retainer bolts from the out chamber, and remove the out chamber. [Fig.5.4]

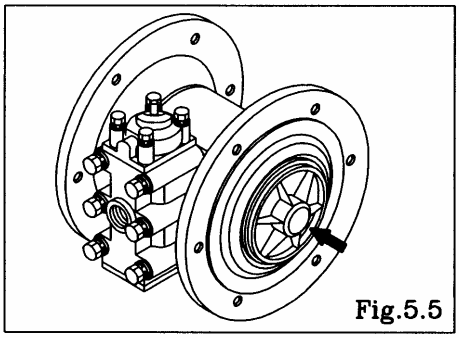

Fig.5.5

- Remove the center disk from one side using the Accessory tool (special tool: Part No. 771244). [Fig.5.5]
- After the center disk (outside) has been removed, remove the diaphragm and the center disk (inside).
- Remove the center disk and center rod from the opposite side of the main body.

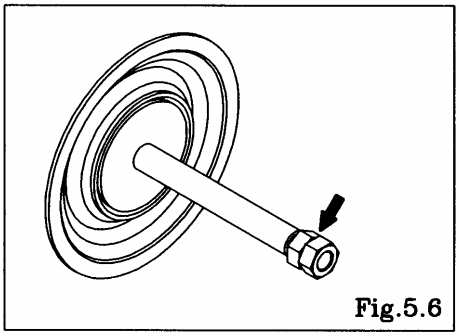

Fig.5.6

- Fix a double nut to one end of the center rod and take the diaphragm and center disk off the opposite end. [Fig.5.6]
  Be careful not to scratch or score the center rod.

5.2 Inspection

- Diaphragm
  If the diaphragm is worn out or damaged, replace it.
  New replace just one diaphragm.

Guideline of diaphragm life

CR, NBR, EPDM	10,000,000 cycle
FKM	2,500,000 cycle
PTFE	3,000,000 cycle
TPEE, TPO	15,000,000 cycle

(When used with clean water at room temperature)

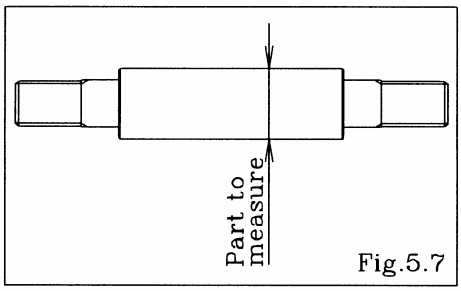

Fig.5.7

- Center rod [Fig.5.7]
  Measure the diameter, and if it is outside the usable range, replace the center rod.

Usable range of center rod

Ø 17.9 ~ Ø18.0 mm

5.3 Installation

■B□C[-D], B□N[-D], B□E, B□V, B□H[-D], B□S, B□H/T types

For installation, see [Exploded View] on the separate sheet and install in the reverse order of disassembly.

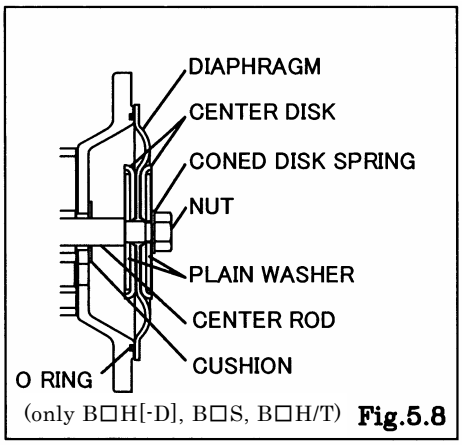

(only B□H[-D], B□S, B□H/T) **Fig.5.8**

- Install the O ring in the groove the air chamber. (only B□H[-D], B□S, B□H/T)
- Apply grease to the center rod, and insert it into the main body.
- Keep the marking "OUTSIDE" to liquid end for CR, NBR, EPDM, FKM diaphragms.
- Keep the convex side to the outside for TPEE, TPO diaphragms.
- Tighten the center disk using the Accessory tool (special tool: Part No.771244) for the BP□, BV□ types. (No coned disk springs and nuts are needed.)

Tightening torque for center rod

B□C, B□N, B□E, B□V	40 N・m
B□H, B□S, B□H/T	

- Draw the center disk to one side, (cf. Fig.5.8) and install the out chamber. Tighten the bolts temporarily.
- Draw the center disk to the opposite side, then turn the diaphragm over (cf. Fig.5.8). And install the out chamber. Tighten the bolts temporarily.
- After installation of the out chambers on both sides, place the pump on a flat surface and stand the pump upright for further assembly.

Tightening torque for out chamber.

NDP-20	B□C, B□N, B□E, B□V	10 N・m
	B□H, B□S, B□H/T	13 N・m
NDP-25 NDP-32	B□C, B□N, B□E, B□V	10 N・m
	B□H, B□S, B□H/T	20 N・m

<NOTE>
- Make sure there is no dust on the seal surface in order to prevent seal damaged.
- Tighten the bolts that balance should be equal from both side on diagonal line with even torque.

■B□T[-D] types

For installation, see [Exploded View] on the separate sheet and install in the reverse order of disassembly.

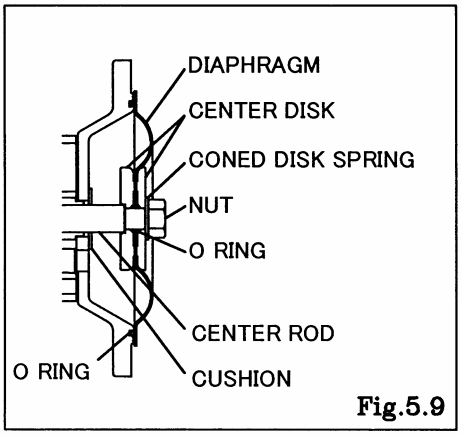

Fig.5.9

- Install the O ring in the groove the air chamber.
- Apply grease to the center rod, and insert it into the main body.
- Keep the convex side to the outside (cf. Fig.5.9).
- Put the O rings to both sides of the diaphragm. (cf. Fig.5.9).
- Tighten the center disk using the Accessory tool (special tool: Part No. 771244) for the BPT, BVT types. (No coned disk springs and nuts are needed.)

Tightening torque for center rod

40 N・m

- Tighten the out chamber temporarily at first.
- After installation of the out chambers on both sides, place the pump on a flat surface and stand the pump upright for further assembly.

Tightening torque for out chamber

NDP-20	13 N・m
NDP-25 NDP-32	20 N・m

<NOTE>
- Make sure there is no dust on the seal surface in order to prevent seal damaged.
- Replace the PTFE O ring by new one.
- Tighten the bolts that balance should be equal from both side on diagonal line with even torque.

6. Throat bearing and Pilot valve Assembly

6.1 Removal

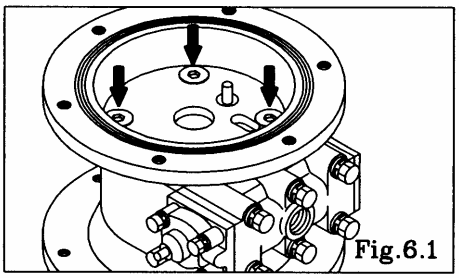
Fig.6.1

- Remove the diaphragm and center rod (see [5.1 Removal]).
- Remove the 8 retainer bolts from the air chamber, and remove the air chamber and gasket. [Fig.6.1]

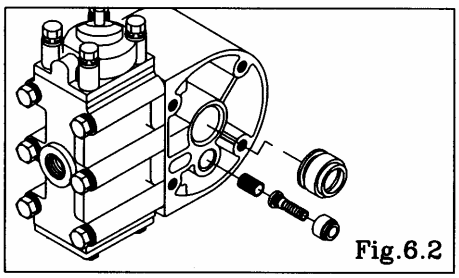
Fig.6.2

- Draw out the pilot valve assembly. [Fig.6.2]
- Draw out the throat bearing. [Fig.6.2]

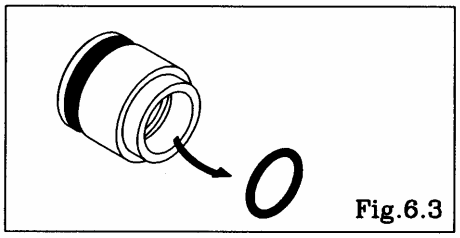
Fig.6.3

- Remove the packing from the throat bearing. [Fig.6.3]

6.2 Inspection

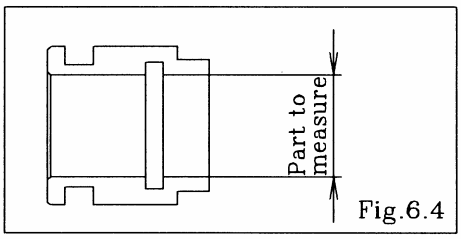

Fig.6.4

- Throat bearing [Fig.6.4]
  Measure the inside diameter, and if it is outside the usable range, replace the throat bearing.

Usable range of throat bearing

Ø 18.03 ~ Ø 18.14 mm

- O rings, Packing
  If the O ring is worn out or cracked, replace it.
- Pilot valve assembly
  If the pilot valve is worn out or cracked, replace it.

6.3 Installation

For installation, see [Exploded View] on the separate sheet and install in the reverse order of disassembly.

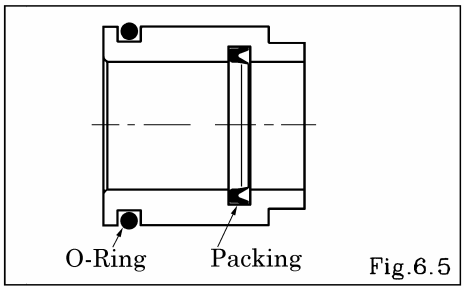

Fig.6.5

Tightening torque for air chamber retainer bolts

18 N・m

<NOTE>

- Make sure there is no dust on the seal surface and the seal is not damaged.
- Apply grease to packing.

7. C Spool Valve Assembly and Sleeve Assembly

7.1 Removal

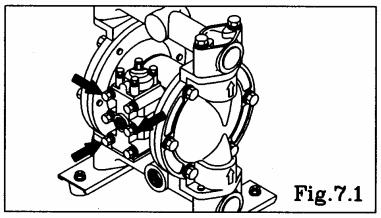
Fig.7.1

- Remove the 6 retainer bolts from the valve body, and remove the valve body. [Fig.7.1]

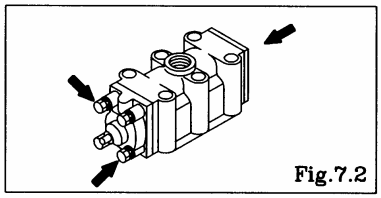
Fig.7.2

- Remove the 8 cap A and cap B retainer bolts, and remove cap A, cap B, packing, plain washer, cushion and gasket. [Fig.7.2]
- Draw out the C spool valve assembly, and remove the seal ring from the C spool valve assembly.

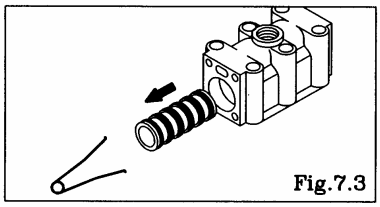
Fig.7.3

- Remove the sleeve using the sleeve remover (special tool: Part number 713148). [Fig.7.3]

7.2 Inspection

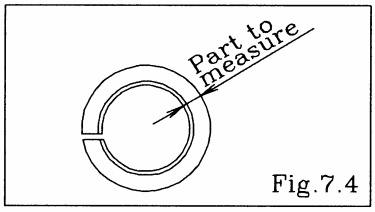

Fig.7.4

- C Spool Valve Assembly
  Seal ring [Fig.7.4]
  Measure the inside thick diameter, and if it is outside the usable range, replace the C Spool Valve Assembly.
  If the seal ring is worn out or cracked, replace C Spool Valve Assembly.

Usable range of Seal ring
2.97 ~ 3.02 mm

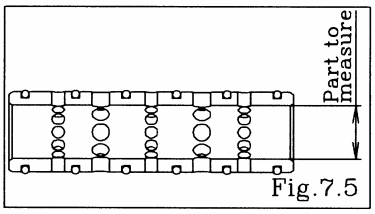

Fig.7.5

- Sleeve Assembly [Fig.7.5]
  Measure the inside diameter, and if it is outside the usable range, replace the sleeve assembly.

Usable range of Sleeve
Ø 18.63 ~ Ø 18.65 mm

- O rings
  If the O ring is worn out or cracked, replace it.

<NOTE>

- C Spool Valve Assembly and Sleeve Assembly must be replaced complete set. Unable to replace individual component

7.3 Installation

For installation, see [Exploded View] on the separate sheet and install in the reverse order of disassembly.

Tightening torque for installation Cap A, Cap B
6 N・m
Tightening torque for Valve body installation bolts
7.5 N・m

<NOTE>

- Make sure there is no dust on the seal surface and it is not damaged.
- Install the sleeve at the center of the valve body. At this point, apply lubricating oil around the sleeve and O ring.

8. Retightening of Tie rods

■ Metal type

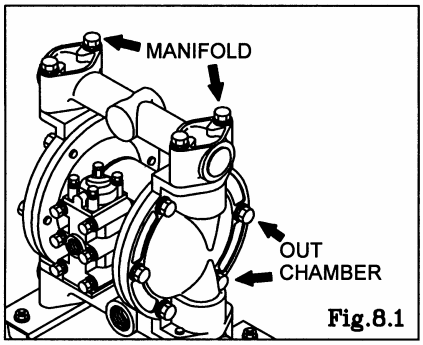

Fig.8.1

▪ The torque should be applied on the occasion of
(1) Right before the pump to use.
(2) There are any leaks of material on daily inspecting a pump.

		Retainer bolts from the out chamber	Retainer bolts from the manifold
NDP-20	B□C[-D], B□N[-D], B□E, B□V	10 N・m	10 N・m
	B□T	13 N・m	20 N・m
	B□H[-D], B□S, B□H/T	13 N・m	10 N・m
	BAT-D	13 N・m	IN SIDE 15 N・m OUT SIDE 20 N・m

		Retainer bolts from the out chamber	Retainer bolts from the manifold
NDP-25 NDP-32	B□C, B□N, B□E, B□V	10 N・m	10 N・m
	B□T	20 N・m	35 N・m
	B□H, B□S, B□H/T	20 N・m	10 N・m

<NOTE>
▪ Tighten the bolts that balance should be equal from both side on diagonal line with even torque.
▪ Retighten the Out chamber and then the manifold in this order. [Fig.8.1]

■ Plastic type

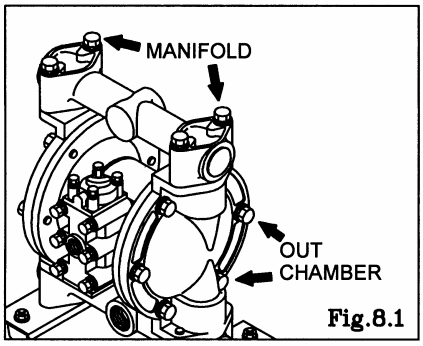

Fig.8.1

▪ The torque should be applied on the occasion of
(1) Right before the pump to use.
(2) There are any leaks of material on daily inspecting a pump.

		Retainer bolts from the out chamber	Retainer bolts from the manifold
NDP-20	B□C, B□N, B□E, B□V	10 N・m	10 N・m
	BPT	13 N・m	12 N・m
	B□H, B□S, B□H/T	13 N・m	10 N・m

		Retainer bolts from the out chamber	Retainer bolts from the manifold
NDP-25	B□C, B□N, B□E, B□V	10 N・m	10 N・m
	B□T, BVH	20 N・m	12 N・m
	BPH, B□S, B□H/T	20 N・m	10 N・m

<NOTE>
▪ Tighten the bolts that balance should be equal from both side on diagonal line with even torque.
▪ Retighten the Out chamber and then the manifold in this order. [Fig.8.2]

Manufactured by
YAMADA CORPORATION

INTERNATIONAL DEPARTMENT
No.1-3, 1-Chome, Minami- Magome, Ohta-Ku, Tokyo, 143-8504, Japan
PHONE : +81-(0)3-3777-0241
FAX : +81-(0)3-3777-0584

201107 NDP187M