1. Principles of operation

There are two diaphragms fixed to the center rod, one at each end. When compressed air is supplied to air chamber b (right side, see Fig. 1.1), the center rod moves to the right, the material in material chamber B is pushed out, and at the same time material is sucked into material chamber A.
When the center rod is moved full-stroke to the right, the air switch valve is switched, compressed air is sent to air chamber a (left side, see Fig.1.2), and the center rod moves to the left. The material in material chamber A is pushed out, and at the same time material is sucked into material chamber B.
Through repetition of this operation, material is repeatedly taken in and discharged out.

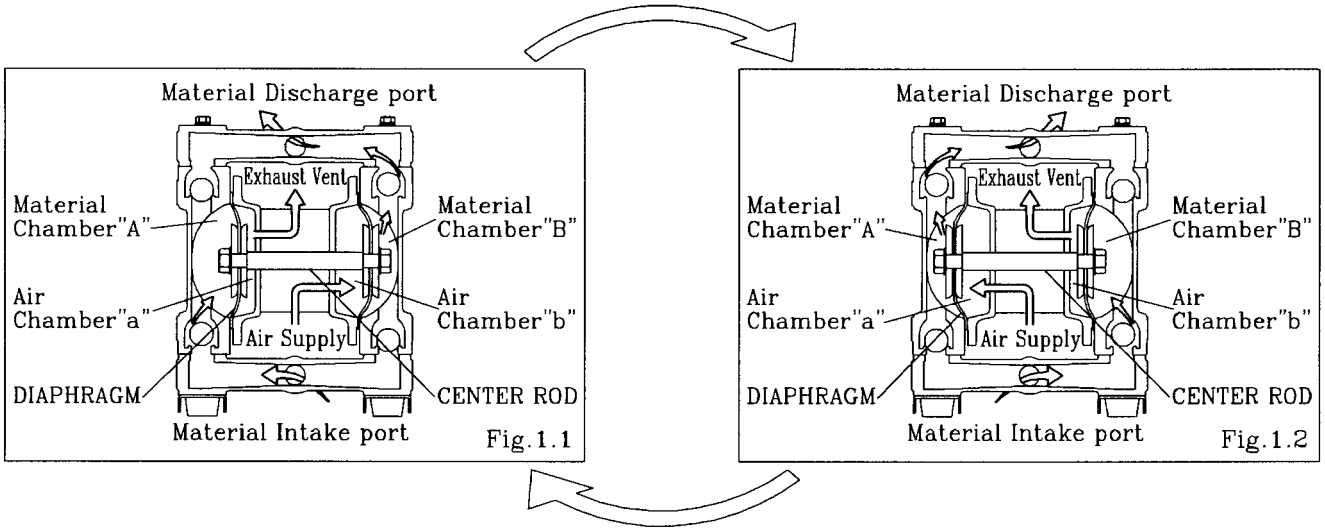

2. Tools, etc.

2.1 General tools

·Socket wrenches	13mm
·Hexagonal box wrenches	5mm, 6mm
·Open-end wrenches	21mm (BP□)
·Snap ring pliers	

2.2 Misc.

·Assembly oil	Turbine oil none addition class 1 (equivalent to ISO VG32 grade)
·Nuts	M8 ×1.25 (BA□, BS□)
· Grease	Urea grease grade (NLGI) No.2

3. Ordering Replacement parts

For accurate and speedy shipment of parts, be sure to order the right parts for your model to distributor.
Indicate the part numbers, descriptions, and quantities

4. Balls and Valve seats

4.1 Removal

■BA□, BS□ types

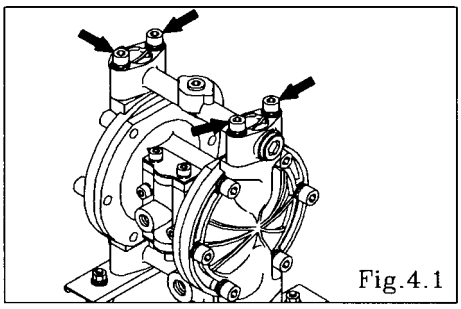
Fig.4.1

- Remove the 4 retainer bolts from the out manifold, and remove the out manifold. [Fig.4.1]

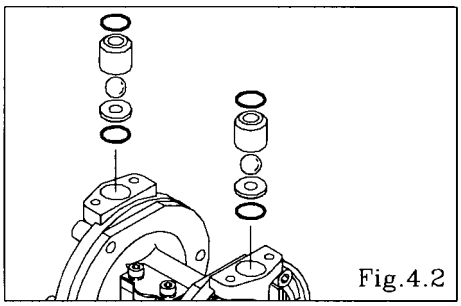
Fig.4.2

- Remove the O ring, valve stopper, ball and valve seat. [Fig.4.2]

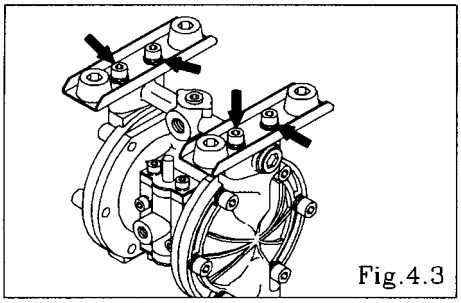
Fig.4.3

- Turn over the main body assembly. [Fig.4.3]
- Remove the 4 retainer bolts from the in manifold, and remove the in manifold. [Fig.4.3]

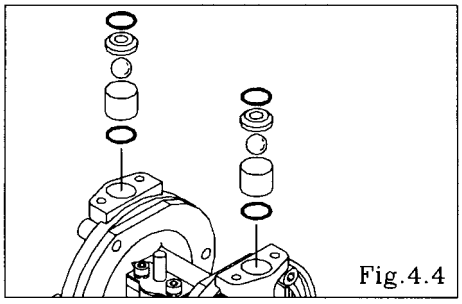
Fig.4.4

- Remove the O ring, valve seat, ball and valve stopper. [Fig.4.4]

■BP□type

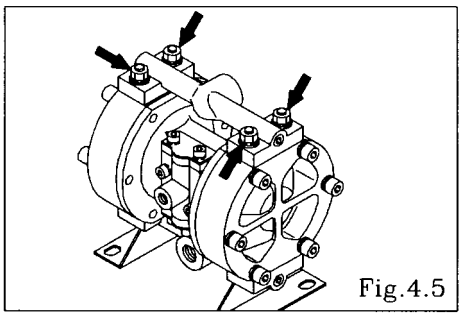
Fig.4.5

- Remove the 4 retainer nuts from the out manifold, and remove the out manifold. [Fig.4.5]

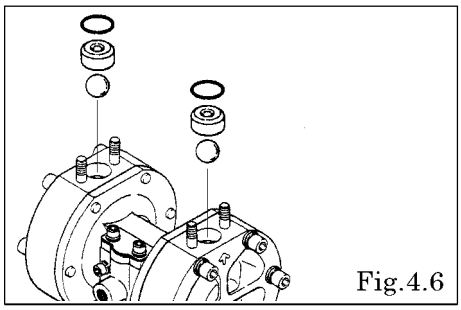
Fig.4.6

- Remove the O ring, valve stopper, ball and valve seat. [Fig.4.6]

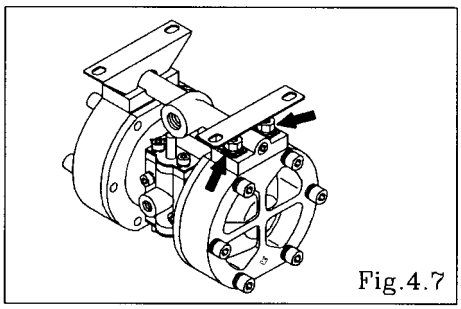
Fig.4.7

- Turn over the main body assembly. [Fig.4.7]
- Remove the 4 retainer nuts from the in manifold, and remove the in manifold. [Fig.4.7]

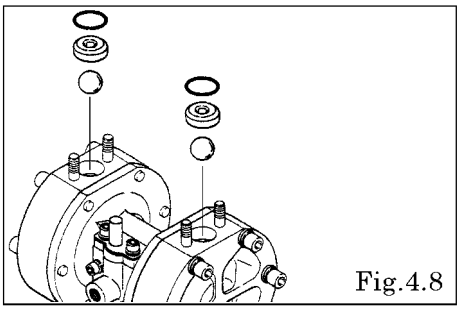
Fig.4.8

- Remove the O ring (excluded BPC, BPN), ball and valve seat. [Fig.4.8]

4.2 Inspection

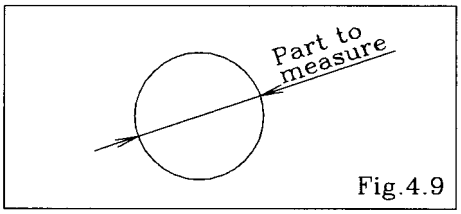

Fig.4.9

- Ball [Fig.4.9]
  Measure the outside diameter, and if it is outside the usable range, replace the ball.

Usable range of ball

Sø14.3 ~ Sø16.3 mm

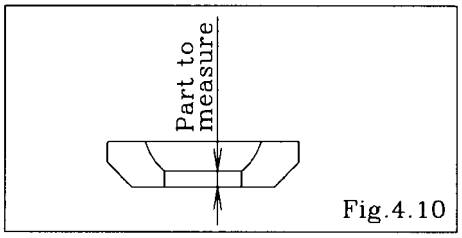

Fig.4.10

- Valve seat [Fig.4.10]
  Measure the dimension shown at left, and if it is outside the usable range, replace the seat.

Usable range of valve seat

BA□, BS□, BPH, BPT, BPS	2.0 ~ 5.1 mm
BPC, BPN	2.0 ~ 6.7 mm

- O ring (other than PTFE)
  If O rings are worn out or cracked, replace them.

4.3 Installation

For installation, see [Exploded View] on the separate sheet and install in the reverse order of disassembly.

Tightening torque for manifold retainer bolts

BA□, BS□	12 N・m
BP□	8 N・m

<NOTE>

- Make sure there is no dust on the seal surface and the seal is not damaged.
- Replace the PTFE O ring regardless of its condition.

5. Diaphragm

5.1 Removal

■BA□, BS□ types

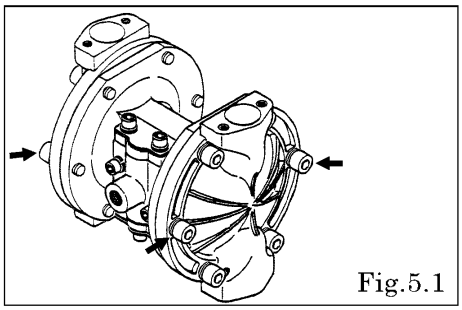

Fig.5.1

- Remove the ball and valve seat etc.(see [4.1 Removal BA□, BS□ types] on P.2)
- Remove the 12 retainer bolts from the out chamber, and remove the out chamber. [Fig.5.1]

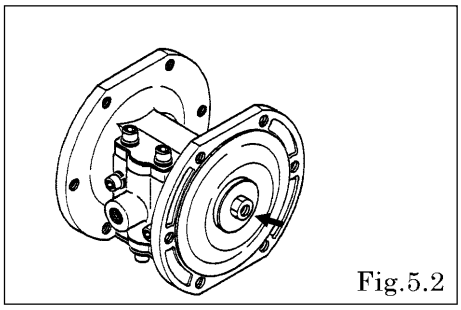

Fig.5.2

- Remove the nuts on both sides of the center rod. [Fig.5.2]
- After the nuts on one side have been removed, remove the center disk and diaphragm. [Fig.5.2]

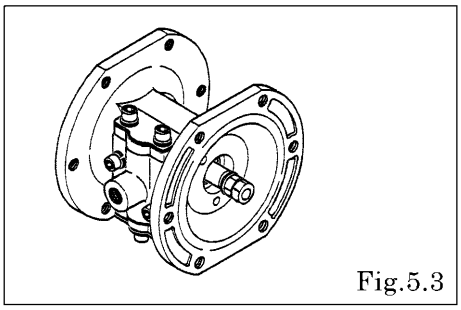

Fig.5.3

- Remove the nuts on the opposite side using the double nut. [Fig.5.3]
- Remove the coned disk spring, center disk and diaphragm.

■BP□ type

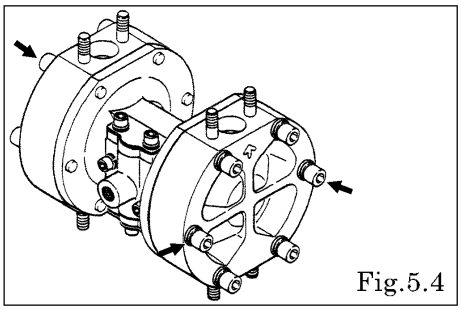

Fig.5.4

- Remove the ball and valve seat etc. (see [4.1 Removal BP□ type] on P.2)
- Remove the 12 retainer bolts from the out chamber, and remove the out chamber. [Fig.5.4]

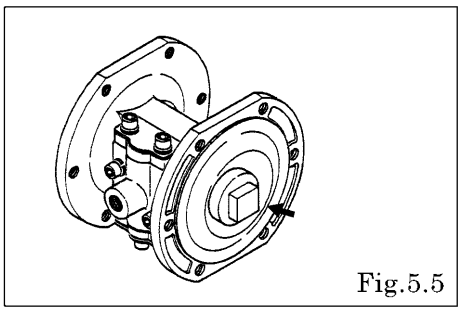

Fig.5.5

- Remove the center disk from one side. [Fig.5.5]
- After the center disk (outside) has been removed, remove the diaphragm and the center disk (inside).

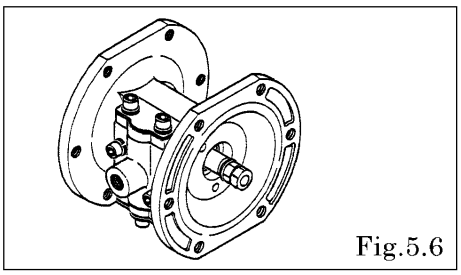

Fig.5.6

- Remove the center disk and diaphragm from the opposite side using the double nut. [Fig.5.6]
  Be careful not to scratch or score the center rod.

5.2 Inspection

- Diaphragm
  If the diaphragm is worn out or damaged, replace it.
  New replace just one diaphragm.

Guideline of diaphragm life

CR, NBR, PTFE	10,000,000 cycle
TPEE, TPO	15,000,000 cycle

(When used with clean water at room temperature)

5.3 Installation

■B□H, B□S types

For installation, see [Exploded View] on the separate sheet and install in the reverse order of disassembly.

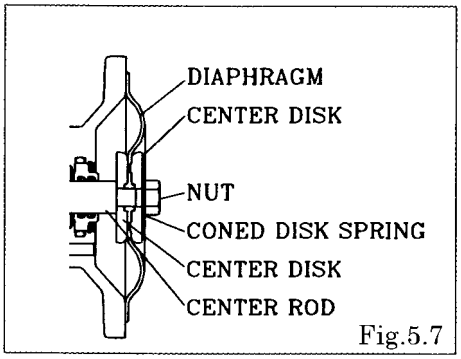

Fig.5.7

- Apply assembly grease to the center rod, and insert it into the main body.
- Keep the convex side to the outside (cf.Fig.5.7).
- Tighten the center disk using the open-end wrenches for BP□ type.
  (No coned disk springs and nuts are needed.)
- Tighten the out chamber temporarily at first.
- After installation of the out chambers on both sides, place the pump on a flat surface and stand the pump upright for further assembly.

Tightening torque for center rod and out chamber

center rod	out chamber
14 N・m	12 N・m

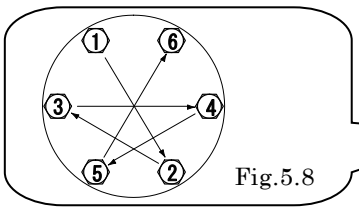

Fig.5.8

<NOTE>
- Make sure there is no dust on the seal surface in order to prevent seal damaged.
- Tighten the bolts gradually in a diagonal sequence with even torque. [Fig.5.8].

■B□C, B□N, B□T types

For installation, see [Exploded View] on the separate sheet and install in the reverse order of disassembly.

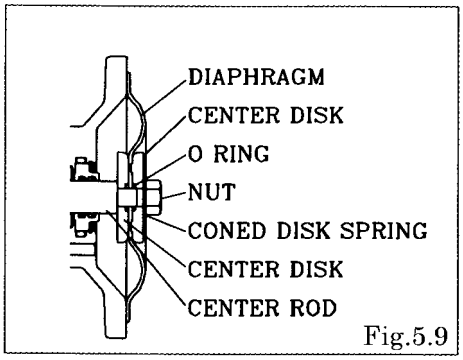

Fig.5.9

- Apply Assembly grease to the center rod, and insert it into the main body.
- Keep the marking "LIQUID" to liquid end for CR, NBR diaphragms.
- Keep the convex side to the outside for PTFE diaphragm.
- Install the O ring (cf. Fig.5.9).
- Tighten the center disk using the open-end wrenches for BP□ type.
  (No coned disk springs and nuts are needed.)
- After installation of the out chambers on both sides, place the pump on a flat surface and stand the pump upright for further assembly.

Tightening torque for center rod and out chamber.

center rod	out chamber
14 N・m	12 N・m

<NOTE>
- Make sure there is no dust on the seal surface in order to prevent seal damaged.
- Replace the PTFE O ring by new one.
- Tighten the bolts gradually in a diagonal sequence with even torque. [Fig.5.10].

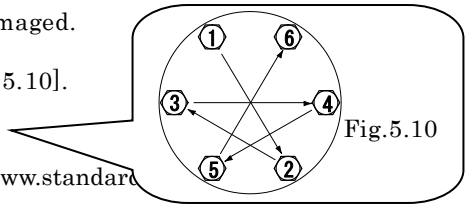

Fig.5.10

6. Center rod, Body and Guide bushing

6.1 Removal

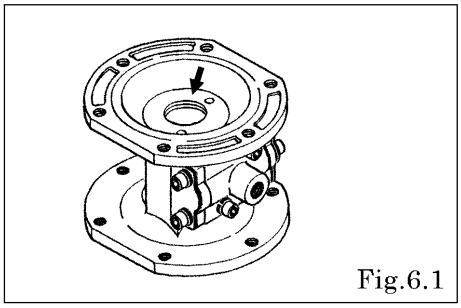

Fig.6.1

- Remove the diaphragm etc. (see [5.1 Removal] on P.4)
- Remove the snap ring using the snap ring pliers, and remove the guide bushing, spacer and center rod assembly.
  [Fig.6.1]

6.2 Inspection

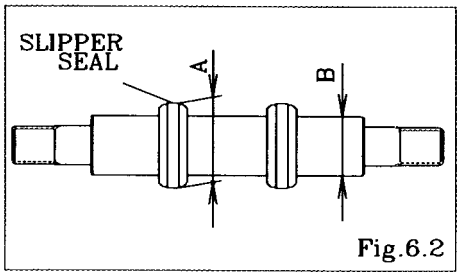

Fig.6.2

- Center rod assembly [Fig.6.2]
  Measure the outside diameter (A), and if it is outside the usable range, replace the slipper seal.

Usable range of Slipper seal (A)
Ø 19.9 ~ Ø 20.0 mm

Measure the outside diameter (B), and if it is outside the usable range, replace the center rod Slipper seal.

Usable range of Center rod (B)
Ø 13.9 ~ Ø 14.0 mm

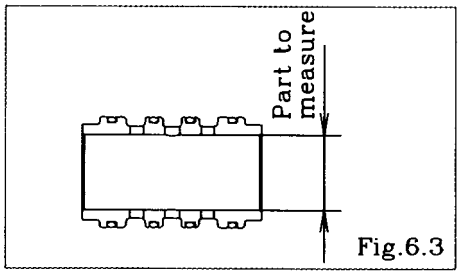

Fig.6.3

- Sleeve [Fig.6.3]
  Measure the inside diameter, and if it is outside the usable range, replace the Sleeve.
  Remove the Sleeve from the Spacer side.

Usable range of sleeve
Ø 20.00 ~ Ø 20.08 mm

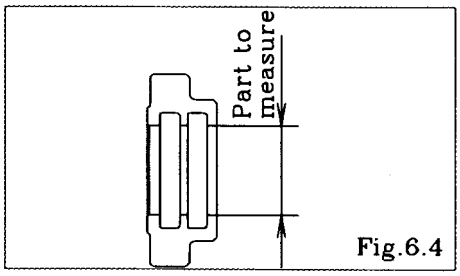

Fig.6.4

- Guide bushing [Fig.6.4]
  Measure the inside diameter, and if it is outside the usable range, replace the guide bushing.

Usable range of Guide bushing
Ø 14.02 ~ Ø 14.08 mm

- O ring
  If the O ring is worn out or cracked, replace it.

6.3 Installation

For installation, see [Exploded View] on the separate sheet and install in the reverse order of disassembly.

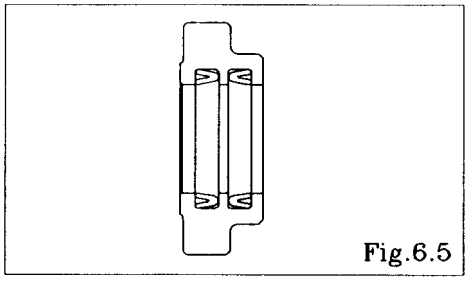

Fig.6.5

<NOTE>

- Make sure there is no dust on the seal surface and it is not damaged.
- Apply grease to packing.

7. Spool valve case and Spool Assembly

7.1 Removal

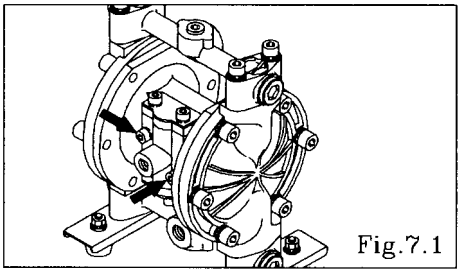

Fig.7.1

- Remove the 2 retainer bolts from the spool valve case, and remove the spool valve case. [Fig.7.1]

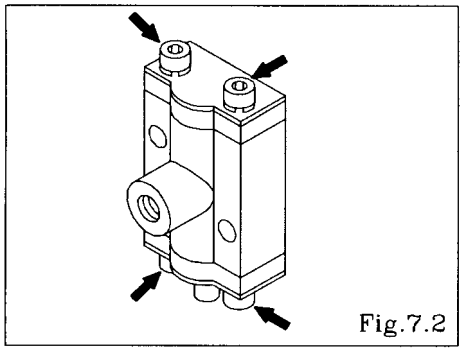

Fig.7.2

- Remove the 2 retainer bolts from the cap, and remove the reinforcement plate A, cap and reset button. [Fig.7.2]
- Remove the 2 retainer bolts from the cap, and remove the reinforcement plate B, and cap. [Fig.7.2]
- Remove the spool valve assembly from the spool valve case.

7.2 Inspection

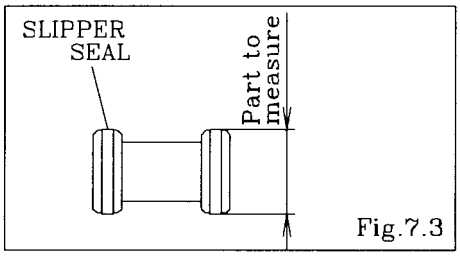

Fig.7.3

- Spool valve assembly [Fig.7.3]
  Measure the outside diameter, and if it is outside the usable range, replace the slipper seal.

Usable range of spool valve assembly
Ø 19.9 ~ Ø 20.0 mm

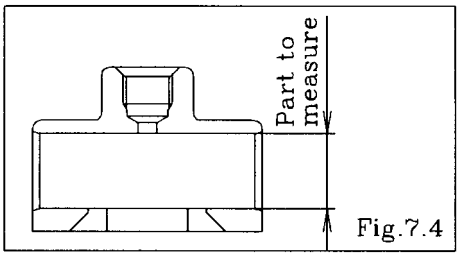

Fig.7.4

- Spool valve case [Fig.7.4]
  Measure the inside diameter, and if it is outside the usable range, replace the Spool valve case.

Usable range of spool valve case
Ø 20.00 ~ Ø 20.08 mm

7.3 Installation

For installation, see [Exploded View] on the separate sheet and install in the reverse order of disassembly.

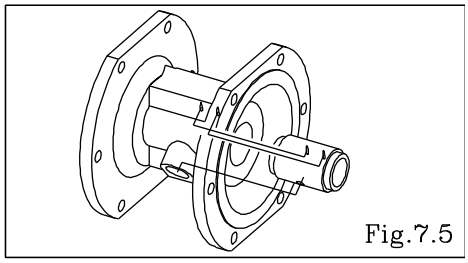

Fig.7.5

Tightening torque for installation Cap
6 N・m

Tightening torque for installation Spool valve case
6 N・m

- Sleeve [Fig.7.5]
  When inserting the sleeve into the body, please make sure the position of the 3 holes in the sleeve match the corresponding holes in the body.

<NOTE>

- Make sure there is no dust on the seal surface and it is not damaged.

8. Retightening of Tie rods

■ Metal type

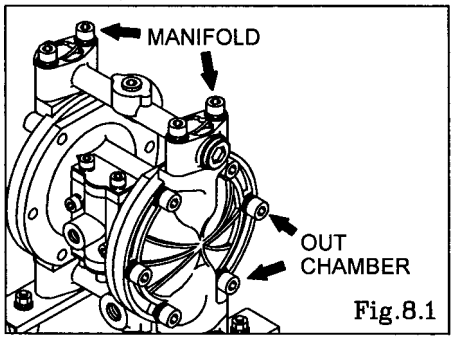

Fig.8.1

▪ All bolts should be retorqued:

(1) Right before start up.
(2) There are any leaks of material on daily inspecting a pump.

		Retain bolts for the out chamber	Retain bolts for the manifold
XX-10	BA□	12 N・m	12 N・m
	BS□		

<NOTE>
▪ Retighten the Out chamber and then the manifold in this order. [Fig.8.1]
▪ Tighten the bolts in the order shown.

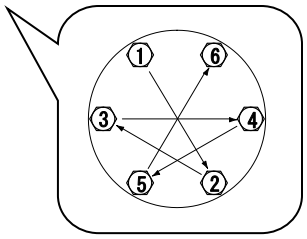

■ Plastic type

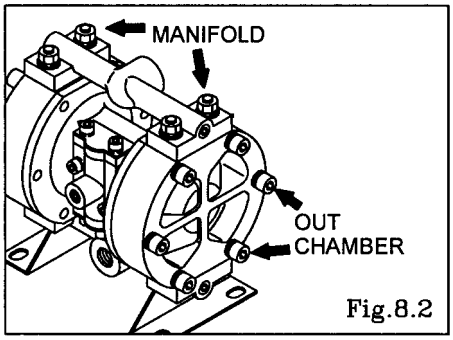

Fig.8.2

▪ All bolts should be retorqued:

(1) Right before start up.
(2) There are any leaks of material on daily inspecting a pump.

		Retain bolts for the out chamber	Retain bolts for the manifold
XX-10	BP□	12 N・m	8 N・m

<NOTE>
▪ Retighten the Out chamber and then the manifold in this order. [Fig.8.2]
▪ Tighten the bolts in the order shown.

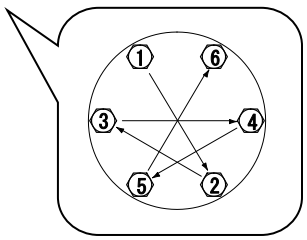

PlusAir

STANDARD PUMP Europe

STANDARD PUMP Europe

Ronnekrogen 2, 3400 Hillerod

Denmark

Tel +45 7023 2100

Fax +45 7023 5655

www.standard-europe.eu